Commercial Automatic Washer

Metered and Nonmetered

Refer to Page 6 for Model Numbers

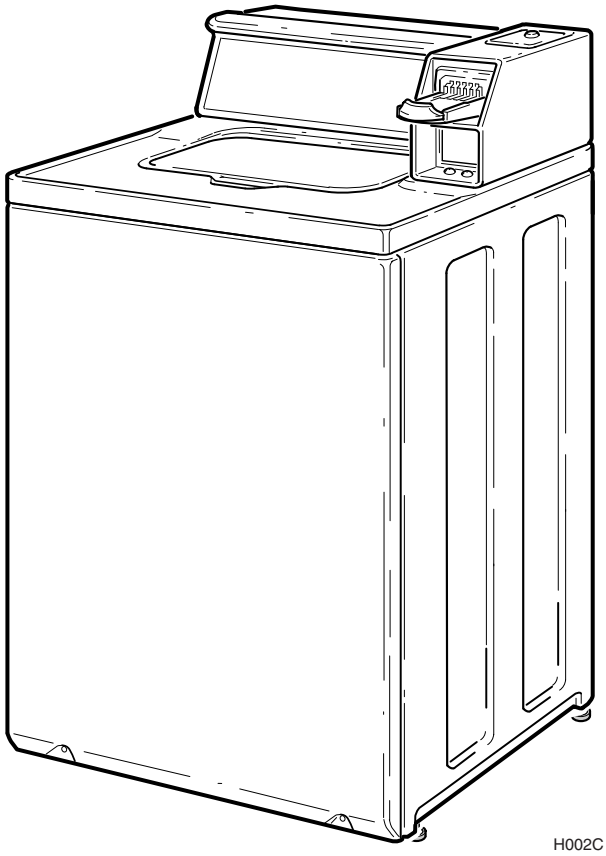

Troubleshooting

Alliance Laundry Systems

www.alliancelaundry.com

Part No. 39201R9
November 2016

Table of Contents

Section 1
Safety Information

Throughout this manual and on machine decals, you will find precautionary statements (“CAUTION,” “WARNING,” and “DANGER”) followed by specific instructions. These precautions are intended for the personal safety of the operator, user, servicer and those maintaining the machine.

DANGER
Danger indicates an imminently hazardous situation that, if not avoided, will cause severe personal injury or death.

WARNING
Warning indicates a hazardous situation that, if not avoided, could cause severe personal injury or death.

CAUTION
Caution indicates a hazardous situation that, if not avoided, may cause minor or moderate personal injury or property damage.

Additional precautionary statements (“IMPORTANT” and “NOTE”) are followed by specific instructions.

IMPORTANT
The word “IMPORTANT” is used to inform the reader of specific procedures where minor machine damage will occur if the procedure is not followed.

NOTE
The word “NOTE” is used to communicate installation, operation, maintenance or servicing information that is important but not hazard related.

In the interest of safety, some general precautions relating to the operation of this machine follow.

WARNING

- **Failure to install, maintain and/or operate this product according to the manufacturer’s instructions may result in conditions which can produce serious injury, death and/or property damage.**
- **Do not repair or replace any part of the product or attempt any servicing unless specifically recommended or published in this Service Manual and unless you understand and have the skills to carry out the servicing.**
- **Whenever ground wires are removed during servicing, these ground wires must be reconnected to ensure that the product is properly grounded and to reduce the risk of fire, electric shock, serious injury or death.**

W006R2

WARNING

To reduce the risk of electric shock, fire, explosion, serious injury or death:
- **Disconnect electric power to the washer before servicing.**
- **Never start the washer with any guards/panels removed.**
- **Whenever ground wires are removed during servicing, these ground wires must be reconnected to ensure that the washer is properly grounded.**

W003

WARNING

Repairs that are made to your products by unqualified persons can result in hazards due to improper assembly or adjustments subjecting you or the inexperienced person making such repairs to the risk of serious injury, electrical shock or death.

W007

WARNING

If you or an unqualified person perform service on your product, you must assume the responsibility for any personal injury or property damage which may result. The manufacturer will not be responsible for any injury or property damage arising from improper service and/or service procedures.

W008

NOTE: The WARNINGS and IMPORTANT INSTRUCTIONS appearing in this manual are not meant to cover all possible conditions and situations that may occur. Common sense, caution and care must be exercised when installing, maintaining or operating the washer.

Always contact your dealer, distributor, service agent or the manufacturer about any problems or conditions you do not understand.

Locating an Authorized Servicer

Alliance Laundry Systems is not responsible for personal injury or property damage resulting from improper service. Review all service information before beginning repairs.

Warranty service must be performed by an authorized technician, using authorized factory parts. If service is required after the warranty expires, Alliance Laundry Systems also recommends contacting an authorized technician and using authorized factory parts.

Section 2
Introduction

Customer Service

If literature or replacement parts are required, contact the source from whom the machine was purchased or contact Alliance Laundry Systems at (920) 748-3950 for the name and address of the nearest authorized parts distributor.

For technical assistance, call the number listed below:

(920) 748-3121 Ripon, Wisconsin

Nameplate Location

When calling or writing about your product, be sure to mention model and serial numbers. Model and serial numbers are located on nameplate(s) as shown.

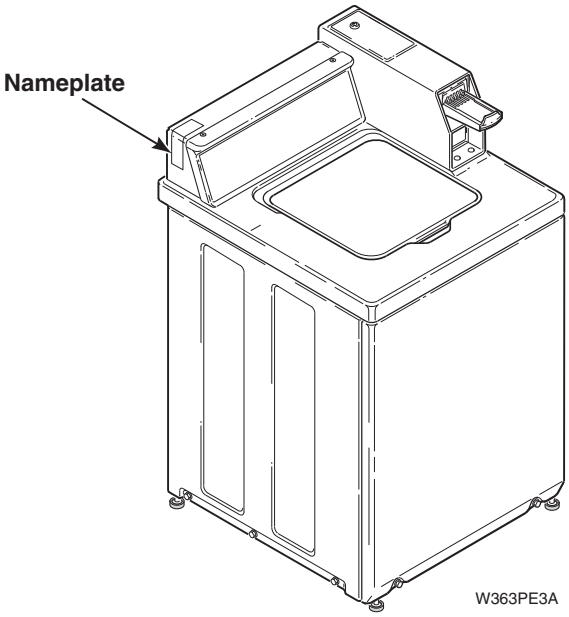

Model Identification

Information in this manual is applicable to these washers.

Washer Model	Non-metered	Metered	Electronic Control	Coin Slide Ready	Coin Drop Ready	Coin Drop Installed	Card Reader Ready	Card Reader Installed	Motor Speed	Wash-tub
BWT820*N1102	X								2	P
BWT920*N1102		X		X					2	P
BWTT20*N		X	X			X			2	P
HWLX21*N1102		X	X		X				2	S
HWNSX1SP301UW09		X		X					1	S
HWT011*B3073	X								1	S
HWT020*A	X								2	P
HWT020*C	X								2	P
HWT020*M	X								2	P
HWT020*N	X								2	P
HWT021*A1102	X								2	S
HWT021*C1102	X								2	S
HWT021*M1102	X								2	S
HWT021*N1102	X								2	S
HWT110*A		X		X					1	P
HWT110*C		X		X					1	P
HWT110*M		X		X					1	P
HWT110*N		X		X					1	P
HWT111*A1102		X		X					1	S
HWT111*A3000		X		X					1	S
HWT111*B3069		X		X					1	S
HWT111*C1102		X		X					1	S
HWT111*C3000		X		X					1	S
HWT111*M1102		X		X					1	S
HWT111*M3000		X		X					1	S
HWT111*N1102		X		X					1	S
HWT120*A		X		X					2	P
HWT120*C		X		X					2	P
HWT120*M		X		X					2	P
HWT120*N		X		X					2	P
HWT121*A1102		X		X					2	S
HWT121*C1102		X		X					2	S
HWT121*C1123		X		X					2	S
HWT121*M1102		X		X					2	S
HWT121*M1123		X		X					2	S
HWT121*N1102		X		X					2	S
HWT1A0*N		X		X					2	P
HWT210*A1102		X		X					1	P
HWT210*C1102		X		X					1	P
HWT210*M1102		X		X					1	P

*** Add Letter To Designate Color. L – Almond W – White Q – Bisque**
Key: 1 = 1 Speed Motor, 2 = 2 Speed Motor, P = Porcelain Washtub, S = Stainless Steel Washtub

Washer Model	Non-metered	Metered	Electronic Control	Coin Slide Ready	Coin Drop Ready	Coin Drop Installed	Card Reader Ready	Card Reader Installed	Motor Speed	Wash-tub
HWT210*N1102		X		X					1	P
HWT211*A3000		X		X					1	S
HWT211*B3020		X		X					1	S
HWT211*C1102		X		X					1	S
HWT211*C3000		X		X					1	S
HWT211*M3000		X		X					1	S
HWT211*M3020		X		X					1	S
HWT211*N3020		X		X					1	S
HWT220*A1102		X		X					2	P
HWT220*C1102		X		X					2	P
HWT220*M1102		X		X					2	P
HWT220*M3000		X		X					2	P
HWT220*M3020		X		X					2	P
HWT221*A1102		X		X					2	S
HWT221*C1102		X		X					2	S
HWT221*M1102		X		X					2	S
HWT221*N1102		X		X					2	S
HWT221*N1127		X		X					2	S
HWT521*A1102		X	X			X			2	S
HWT521*C1102		X	X			X			2	S
HWT621*A1102		X	X				X		2	S
HWT621*C1102		X	X				X		2	S
HWT721*A1102		X	X					X	2	S
HWT721*C1102		X	X					X	2	S
HWT820*N	X								2	P
HWT821*N1102	X								2	S
HWT910*N		X		X					1	P
HWT911*N1102		X		X					1	S
HWT911*N3020		X		X					1	S
HWT920*N		X		X					2	P
HWT921*N1102		X		X					2	S
HWT921*N1127		X		X					2	S
HWTB21*M1102		X	X			X			2	S
HWTB21*N1102		X	X			X			2	S
HWTF21*M1102		X	X					X	2	S
HWTF21*N1102		X	X					X	2	S
HWTR21*N1102		X	X			X			2	S
HWTT20*N		X	X			X			2	P
HWTT21*N1102		X	X			X			2	S
HWTV20*N		X		X					2	P
HWTX21*M3020		X	X		X				2	S
HWTX21*M3022		X	X		X				2	S

*** Add Letter To Designate Color. L – Almond W – White Q – Bisque**
Key: 1 = 1 Speed Motor, 2 = 2 Speed Motor, P = Porcelain Washtub, S = Stainless Steel Washtub

Washer Model	Non-metered	Metered	Electronic Control	Coin Slide Ready	Coin Drop Ready	Coin Drop Installed	Card Reader Ready	Card Reader Installed	Motor Speed	Wash-tub
HWTX21*N1102		X	X		X				2	S
HWTX21*N3020		X	X		X				2	S
HWTX21*N3022		X	X		X				2	S
HWTY20*M		X	X				X		2	P
HWTY20*N		X	X				X		2	P
HWTY21*M1102		X	X				X		2	S
HWTY21*N1102		X	X				X		2	S
HWTZ20*M		X	X			X			2	P
HWTZ20*N		X	X			X			2	P
HWTZ21*M1102		X	X			X			2	S
HWTZ21*N1102		X	X			X			2	S
JWT110*A		X		X					1	P
JWT110*M		X		X					1	P
JWT110*N		X		X					1	P
JWT810*N3020	X								1	P
JWT810*N3050	X								1	P
JWT810*N5400	X								1	P
JWT820*N	X								2	P
JWT820*N3050	X								2	P
JWT910*N		X		X					1	P
JWT910*N3020		X		X					1	P
JWT910*N3050		X		X					1	P
JWT910*N3069		X		X					1	P
JWT920*N		X		X					2	P
JWT920*N3050		X		X					2	P
NWNBX2SP301NW22		X	X		X				2	S
NWT721*A1126		X	X					X	2	S
NWT811*N5422	X								1	S
NWT821*N3022	X								2	S
NWT911*N5422		X		X					1	S
NWT921*N3022		X		X					2	S
NWTF21*M1126		X	X					X	2	S
NWTF21*N1126		X	X					X	2	S
SWL520*N		X	X			X			2	P
SWL521*N		X	X			X			2	S
SWLB20*N		X	X			X			2	P
SWLB21*N		X	X			X			2	S
SWLF20*N		X	X					X	2	P
SWLF21*N		X	X					X	2	S
SWLT20*N		X	X			X			2	P
SWLT21*N		X	X			X			2	S
SWLY20*N		X	X				X		2	P

*** Add Letter To Designate Color. L – Almond W – White Q – Bisque**
Key: 1 = 1 Speed Motor, 2 = 2 Speed Motor, P = Porcelain Washtub, S = Stainless Steel Washtub

Washer Model	Non-metered	Metered	Electronic Control	Coin Slide Ready	Coin Drop Ready	Coin Drop Installed	Card Reader Ready	Card Reader Installed	Motor Speed	Wash-tub
SWLY21*N		X	X				X		2	S
SWNBC2PP111TW02		X	X			X			2	P
SWNMN2SP111TW08	X								2	S
SWNSX1SP541NQ23		X		X					1	S
SWNSX1SP541NW23		X		X					1	S
SWNSX2PP111TW02		X		X					2	P
SWT011*A3000	X								1	S
SWT011*A3022	X								1	S
SWT011*A3028	X								1	S
SWT011*A3050	X								1	S
SWT011*A3062	X								1	S
SWT011*M3000	X								1	S
SWT011*M3022	X								1	S
SWT011*M3050	X								1	S
SWT011*N3000	X								1	S
SWT011*N3022	X								1	S
SWT011*N3028	X								1	S
SWT011*N3050	X								1	S
SWT011*N3062	X								1	S
SWT020*A	X								2	P
SWT020*M	X								2	P
SWT020*N	X								2	P
SWT021*A	X								2	S
SWT021*M	X								2	S
SWT021*N	X								2	S
SWT110*A		X		X					1	P
SWT110*M		X		X					1	P
SWT110*N		X		X					1	P
SWT111*A		X		X					1	S
SWT111*A1200		X		X					1	S
SWT111*A1300		X		X					1	S
SWT111*A3000		X		X					1	S
SWT111*A3022		X		X					1	S
SWT111*A3028		X		X					1	S
SWT111*A3050		X		X					1	S
SWT111*A5412		X		X					1	S
SWT111*B3069		X		X					1	S
SWT111*M		X		X					1	S
SWT111*M1200		X		X					1	S
SWT111*M1300		X		X					1	S
SWT111*M3000		X		X					1	S
SWT111*M3022		X		X					1	S

*** Add Letter To Designate Color. L – Almond W – White Q – Bisque**
Key: 1 = 1 Speed Motor, 2 = 2 Speed Motor, P = Porcelain Washtub, S = Stainless Steel Washtub

Washer Model	Non-metered	Metered	Electronic Control	Coin Slide Ready	Coin Drop Ready	Coin Drop Installed	Card Reader Ready	Card Reader Installed	Motor Speed	Wash-tub
SWT111*M3050		X		X					1	S
SWT111*M3069		X		X					1	S
SWT111*M5412		X		X					1	S
SWT111*N		X		X					1	S
SWT111*N3000		X		X					1	S
SWT111*N3022		X		X					1	S
SWT111*N3028		X		X					1	S
SWT111*N3050		X		X					1	S
SWT111*N3069		X		X					1	S
SWT111*N5412		X		X					1	S
SWT111*N5417		X		X					1	S
SWT120*A		X		X					1	P
SWT120*M		X		X					1	P
SWT120*N		X		X					1	P
SWT121*A		X		X					2	S
SWT121*A3000		X		X					2	S
SWT121*M		X		X					2	S
SWT121*M3000		X		X					2	S
SWT121*N		X		X					2	S
SWT210*A		X		X					1	P
SWT210*A1124		X		X					1	P
SWT210*M		X		X					1	P
SWT210*M1124		X		X					1	P
SWT210*N		X		X					1	P
SWT210*N1124		X		X					1	P
SWT211*A1200		X		X					1	S
SWT211*A1300		X		X					1	S
SWT211*A3000		X		X					1	S
SWT211*A3020		X		X					1	S
SWT211*A3022		X		X					1	S
SWT211*A3062		X		X					1	S
SWT211*B3020		X		X					1	S
SWT211*M3000		X		X					1	S
SWT211*M3020		X		X					1	S
SWT211*M3022		X		X					1	S
SWT211*N3000		X		X					1	S
SWT211*N3020		X		X					1	S
SWT211*N3022		X		X					1	S
SWT211*N3050		X		X					1	S
SWT211*N3062		X		X					1	S
SWT220*A		X		X					2	P
SWT220*M		X		X					2	P

*** Add Letter To Designate Color. L – Almond W – White Q – Bisque**
Key: 1 = 1 Speed Motor, 2 = 2 Speed Motor, P = Porcelain Washtub, S = Stainless Steel Washtub

Washer Model	Non-metered	Metered	Electronic Control	Coin Slide Ready	Coin Drop Ready	Coin Drop Installed	Card Reader Ready	Card Reader Installed	Motor Speed	Wash-tub
SWT220*M1124		X		X					2	P
SWT220*N		X		X					2	P
SWT220*N1124		X		X					2	P
SWT221*A		X		X					2	S
SWT221*M		X		X					2	S
SWT221*N		X		X					2	S
SWT2A0*N		X		X					2	P
SWT2A0*N1124		X		X					2	P
SWT2B0*N1124		X		X					1	P
SWT320*A		X		X					2	P
SWT320*M		X		X					2	P
SWT321*A		X		X					2	S
SWT321*M		X		X					2	S
SWT420*A		X	X		X				2	P
SWT420*D		X	X		X				2	P
SWT420*M		X	X		X				2	P
SWT421*A		X	X		X				2	S
SWT421*A3000		X	X		X				2	S
SWT421*A3022		X	X		X				2	S
SWT421*A3028		X	X		X				2	S
SWT421*A3050		X	X		X				2	S
SWT421*D		X	X		X				2	S
SWT421*M		X	X		X				2	S
SWT421*M3000		X	X		X				2	S
SWT421*M3022		X	X		X				2	S
SWT421*M3050		X	X		X				2	S
SWT520*A		X	X			X			2	P
SWT520*M		X	X			X			2	P
SWT520*N		X	X			X			2	P
SWT521*A		X	X			X			2	S
SWT521*A1119		X	X			X			2	S
SWT521*M		X	X			X			2	S
SWT521*N		X	X			X			2	S
SWT620*A		X	X				X		2	P
SWT620*C		X	X				X		2	P
SWT620*D		X	X				X		2	P
SWT620*M		X	X				X		2	P
SWT621*C		X	X				X		2	S
SWT621*D		X	X				X		2	S
SWT621*D1121		X	X				X		2	S
SWT621*M		X	X				X		2	S
SWT621*M1121		X	X				X		2	S

*** Add Letter To Designate Color. L – Almond W – White Q – Bisque**
Key: 1 = 1 Speed Motor, 2 = 2 Speed Motor, P = Porcelain Washtub, S = Stainless Steel Washtub

Washer Model	Non-metered	Metered	Electronic Control	Coin Slide Ready	Coin Drop Ready	Coin Drop Installed	Card Reader Ready	Card Reader Installed	Motor Speed	Wash-tub
SWT720*A		X	X					X	2	P
SWT720*M		X	X					X	2	P
SWT721*A		X	X					X	2	S
SWT721*M		X	X					X	2	S
SWT811*N3000	X								1	S
SWT811*N3022	X								1	S
SWT811*N3050	X								1	S
SWT811*N3062	X								1	S
SWT820*N	X								2	P
SWT821*N	X								2	S
SWT910*N		X		X					1	P
SWT910*N1124		X		X					1	P
SWT910*N3050		X		X					1	P
SWT911*N		X		X					1	S
SWT911*N3000		X		X					1	S
SWT911*N3020		X		X					1	S
SWT911*N3022		X		X					1	S
SWT911*N3028		X		X					1	S
SWT911*N3050		X		X					1	S
SWT911*N3062		X		X					1	S
SWT911*N3069		X		X					1	S
SWT911*N5412		X		X					1	S
SWT920*N		X		X					2	P
SWT920*N1124		X		X					2	P
SWT921*N		X		X					2	S
SWTA21*M		X	X		X				2	S
SWTA21*M3022		X	X		X				2	S
SWTA21*M3050		X	X		X				2	S
SWTA21*N		X	X		X				2	S
SWTA21*N3050		X	X		X				2	S
SWTB20*M		X	X			X			2	P
SWTB20*N		X	X			X			2	P
SWTB21*M		X	X			X			2	S
SWTB21*N		X	X			X			2	S
SWTBA0*N		X	X			X			2	P
SWTBA1*N		X	X			X			2	S
SWTC20*M		X	X				X		2	P
SWTC20*N		X	X				X		2	P
SWTC21*M		X	X				X		2	S
SWTC21*N		X	X				X		2	S
SWTF20*M		X	X					X	2	P
SWTF20*N		X	X					X	2	P

*** Add Letter To Designate Color. L – Almond W – White Q – Bisque**
Key: 1 = 1 Speed Motor, 2 = 2 Speed Motor, P = Porcelain Washtub, S = Stainless Steel Washtub

Washer Model	Non-metered	Metered	Electronic Control	Coin Slide Ready	Coin Drop Ready	Coin Drop Installed	Card Reader Ready	Card Reader Installed	Motor Speed	Wash-tub
SWTF21*M		X	X					X	2	S
SWTF21*M3050		X	X					X	2	S
SWTF21*N		X	X					X	2	S
SWTF21*N3050		X	X					X	2	S
SWTH20*M		X	X			X			2	P
SWTH20*N		X	X			X			2	P
SWTH21*M		X	X			X			2	S
SWTH21*N		X	X			X			2	S
SWTJ21*M		X	X					X	2	S
SWTJ21*N		X	X					X	2	S
SWTT20*M		X	X			X			2	P
SWTT20*N		X	X			X			2	P
SWTT20*N99M6		X	X			X			2	P
SWTT21*M		X	X			X			2	S
SWTT21*N		X	X			X			2	S
SWTV20*N		X		X					2	P
SWTW20*N		X		X					2	P
SWTW21*N		X		X					2	S
SWTX21*M		X	X		X				2	S
SWTX21*M3000		X	X		X				2	S
SWTX21*M3020		X	X		X				2	S
SWTX21*M3022		X	X		X				2	S
SWTX21*M3050		X	X		X				2	S
SWTX21*M3069		X	X		X				2	S
SWTX21*N		X	X		X				2	S
SWTX21*N1127		X	X		X				2	S
SWTX21*N3000		X	X		X				2	S
SWTX21*N3020		X	X		X				2	S
SWTX21*N3022		X	X		X				2	S
SWTX21*N3050		X	X		X				2	S
SWTX21*N3069		X	X		X				2	S
SWTY20*M		X	X				X		2	P
SWTY20*N		X	X				X		2	P
SWTY21*M		X	X				X		2	S
SWTY21*N		X	X				X		2	S
SWTZ20*M		X	X			X			2	P
SWTZ20*N		X	X			X			2	P
SWTZ21*M		X	X			X			2	S
SWTZ21*N		X	X			X			2	S
UWT011*A3022	X								1	S
UWT011*A3025	X								1	S
UWT011*M3022	X								1	S

*** Add Letter To Designate Color. L – Almond W – White Q – Bisque**
Key: 1 = 1 Speed Motor, 2 = 2 Speed Motor, P = Porcelain Washtub, S = Stainless Steel Washtub

Washer Model	Non-metered	Metered	Electronic Control	Coin Slide Ready	Coin Drop Ready	Coin Drop Installed	Card Reader Ready	Card Reader Installed	Motor Speed	Wash-tub
UWT021*A	X								2	S
UWT021*M	X								2	S
UWT021*N	X								2	S
UWT821*N	X								2	S
UWT821*N1102	X								2	S

*** Add Letter To Designate Color. L – Almond W – White Q – Bisque**
Key: 1 = 1 Speed Motor, 2 = 2 Speed Motor, P = Porcelain Washtub, S = Stainless Steel Washtub

Theory of Operation

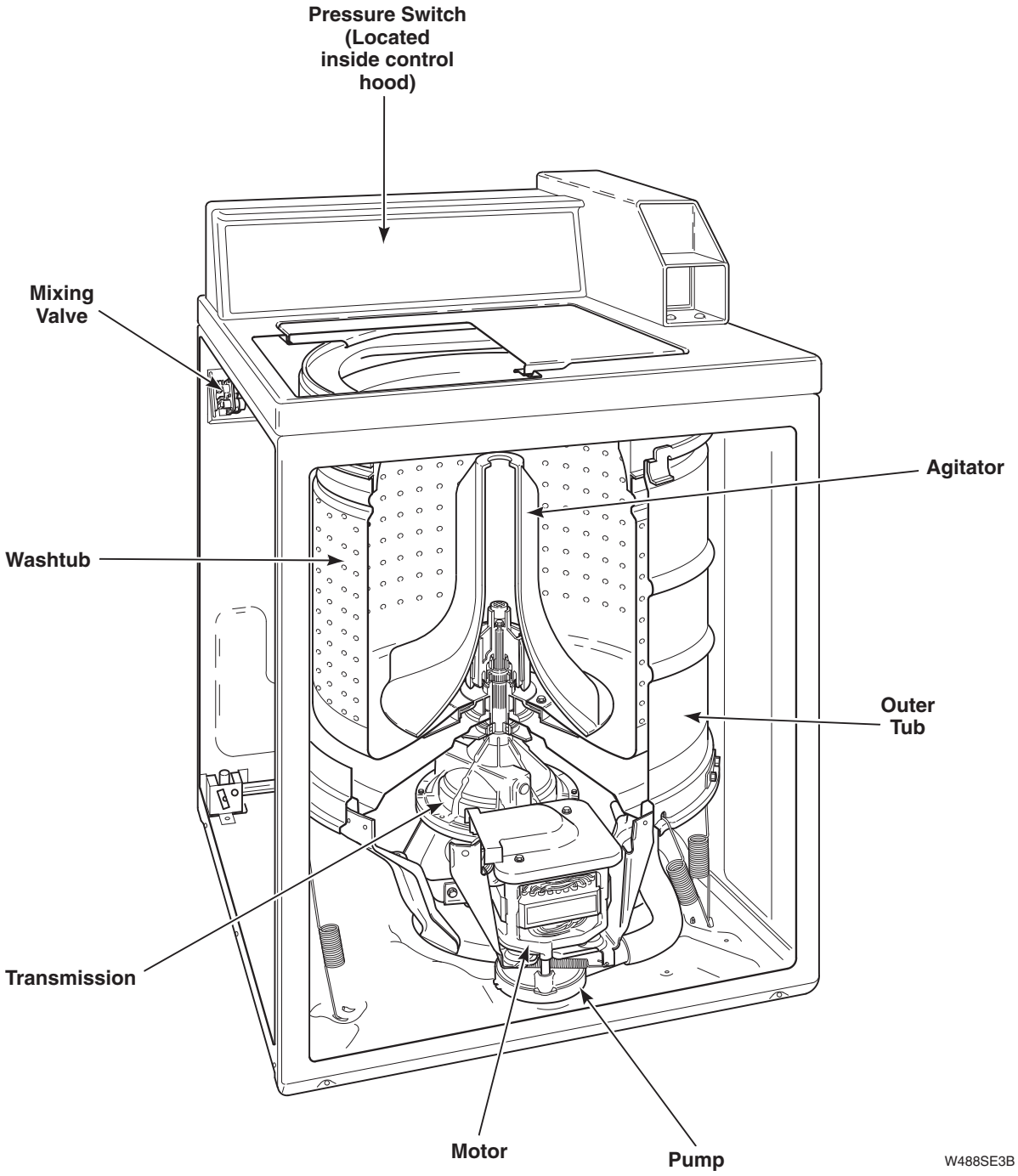

The cycle begins with a wash fill. The water temperature is determined by the temperature selected. While water fills the washtub, a column of air is trapped in a pressure bulb and hose. The air pressure continues to increase as the washtub fills with water until it is great enough to activate the pressure switch. The pressure switch then causes the wash fill to stop and wash agitation to begin. However, the lid must be closed for the washer to agitate or spin.

The washer uses a reversing type motor, a special drive belt and an idler assembly. The idler assembly applies tension to the outside of the drive belt.

During agitation, the motor runs in the counterclockwise direction. The spring tension on the

idler pulley applies the tension required to reduce the slack on the drive belt and maintain maximum belt to motor pulley contact. This eliminates belt slippage and ensures an efficient wash action, even with extra large loads.

The belt drives the transmission drive pulley in the counterclockwise direction. The pulley drives the helix which is splined to the input shaft of the transmission. This causes the input shaft to turn inside of a roller clutch which is pressed into the transmission cover. This roller clutch acts as a bearing in the counterclockwise direction allowing the transmission gears to operate. The transmission's rack and pinion gear design produces a 210 degree agitation stroke at the output shaft of the transmission which drives the agitator. The brake assembly remains locked during the agitation mode since no pressure is applied to it by the transmission drive pulley.

After the wash agitation is completed, the timer advances into the first spin. During spin, the motor reverses turning in the clockwise direction to spin the water out of the washtub. The combination of water, washtub and load weight cause the drive belt tension on the idler side of the belt to overtake the idler spring pressure allowing the belt to become slack on the opposite side. This reduces the belt to pulley contact and allows slipping between the belt and pulley.

As water is removed by the pump and the momentum of the washtub increases, the idler spring tension gradually overcomes the belt tension removing the belt slack. This eventually increases the belt to pulley contact until maximum spin speed is achieved.

The drive pulley turns clockwise riding up the ramps of the helix, exerting pressure on the brake and forcing it to release from brake pads. The helix drives the input shaft of the transmission, and when the input shaft turns in the clockwise direction the roller clutch locks onto the shaft causing the entire transmission assembly to turn. None of the gears in the transmission are operating at this time. The hub of the washtub is splined to the transmission tube and rotates with the transmission assembly. The centrifugal force created by the spinning washtub causes water to be extracted from the clothes.

Water is introduced during the first spin to "SPRAY" the garments and remove suds from them. The initial spin is followed by rinse agitation to rinse away any detergent residue. The washer fills and then agitates like the wash portion of the cycle. Following rinse agitation, a final spin extracts the rinse water from the clothes preparing them for the dryer.

Section 3
General Troubleshooting

WARNING

To reduce the risk of electric shock, fire, explosion, serious injury or death:
- **Disconnect electric power to the washer before servicing.**
- **Never start the washer with any guards/panels removed.**
- **Whenever ground wires are removed during servicing, these ground wires must be reconnected to ensure that the washer is properly grounded.**

W003

IMPORTANT: Refer to appropriate model wiring diagram for aid in testing washer components.

1. Clicking Noise During Operation on NEWLY Installed Units

If a clicking noise is heard when first starting up a new topload washer, the noise is related to the belt taking a temporary "set" around the idler pulley. The set causes a slight bump in the belt which in turn causes the idler lever to tap the motor bracket making the clicking noise. THE BELT DOES NOT NEED TO BE REPLACED.

To correct this condition please perform the following break-in procedure:

1. After installing the unit start a fill cycle to make sure the seals have been lubricated.
2. Stop the fill cycle and place the unit into a spin cycle.
3. Run the cycle for several minutes until the belt has warmed up. This will remove the "set."
4. Normal use will keep the belt from resetting.
5. For extended periods of non-use (three to four weeks), this procedure might need to be repeated.

2. Motor Hums

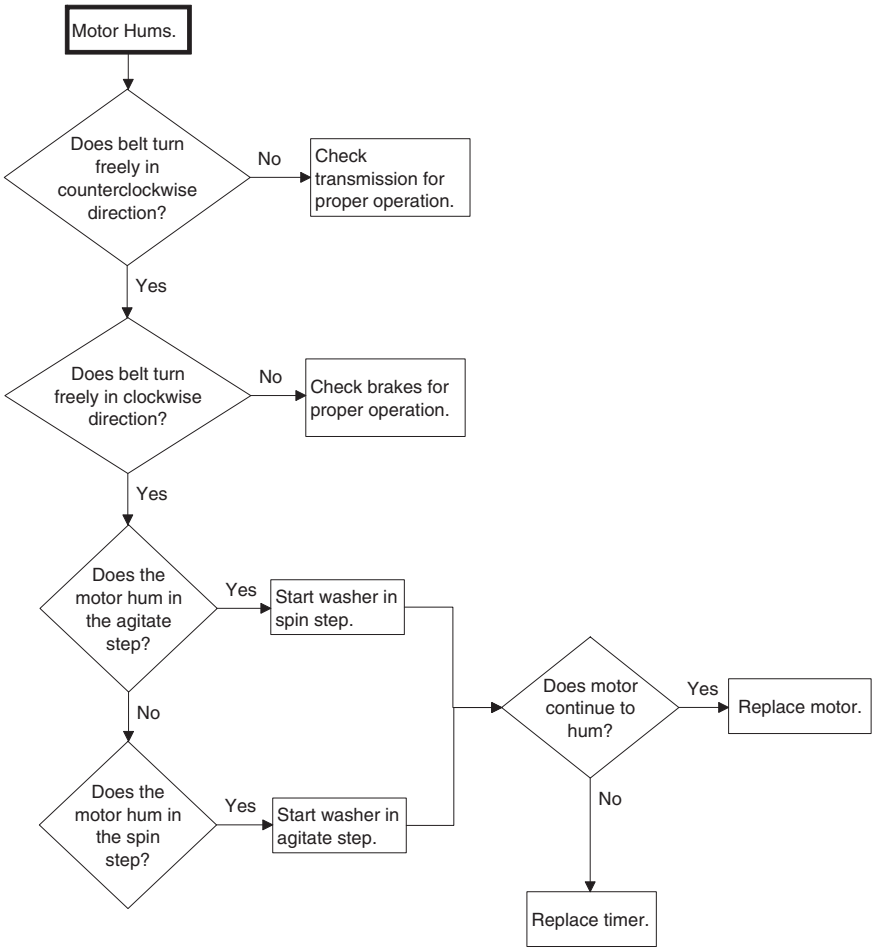

TLW403S

A topload washer exhibiting a humming motor in agitation or spin may require the timer or motor to be replaced. Refer to flow chart to determine if the motor or timer needs to be replaced

3. No Hot Water

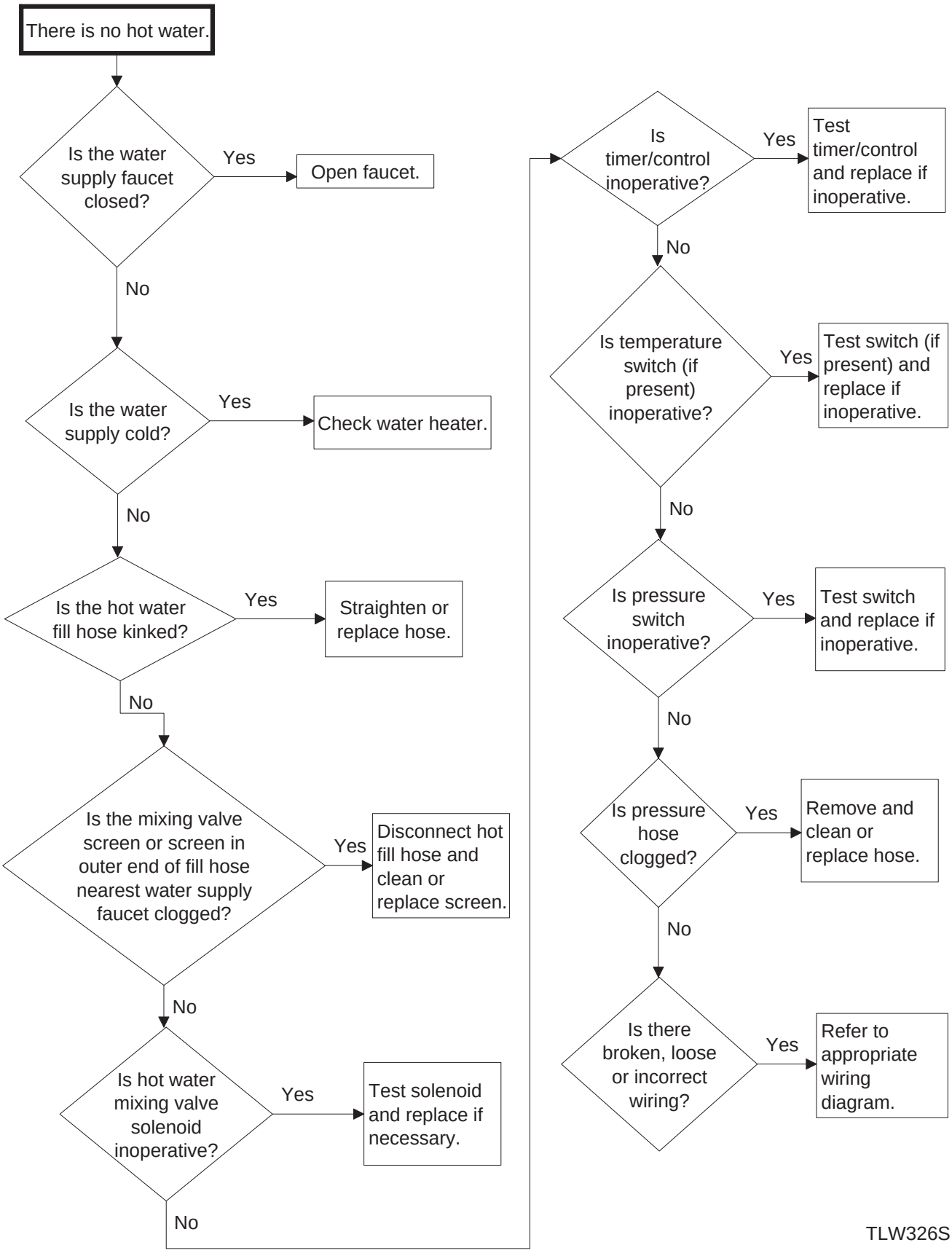

4. No Cold Water

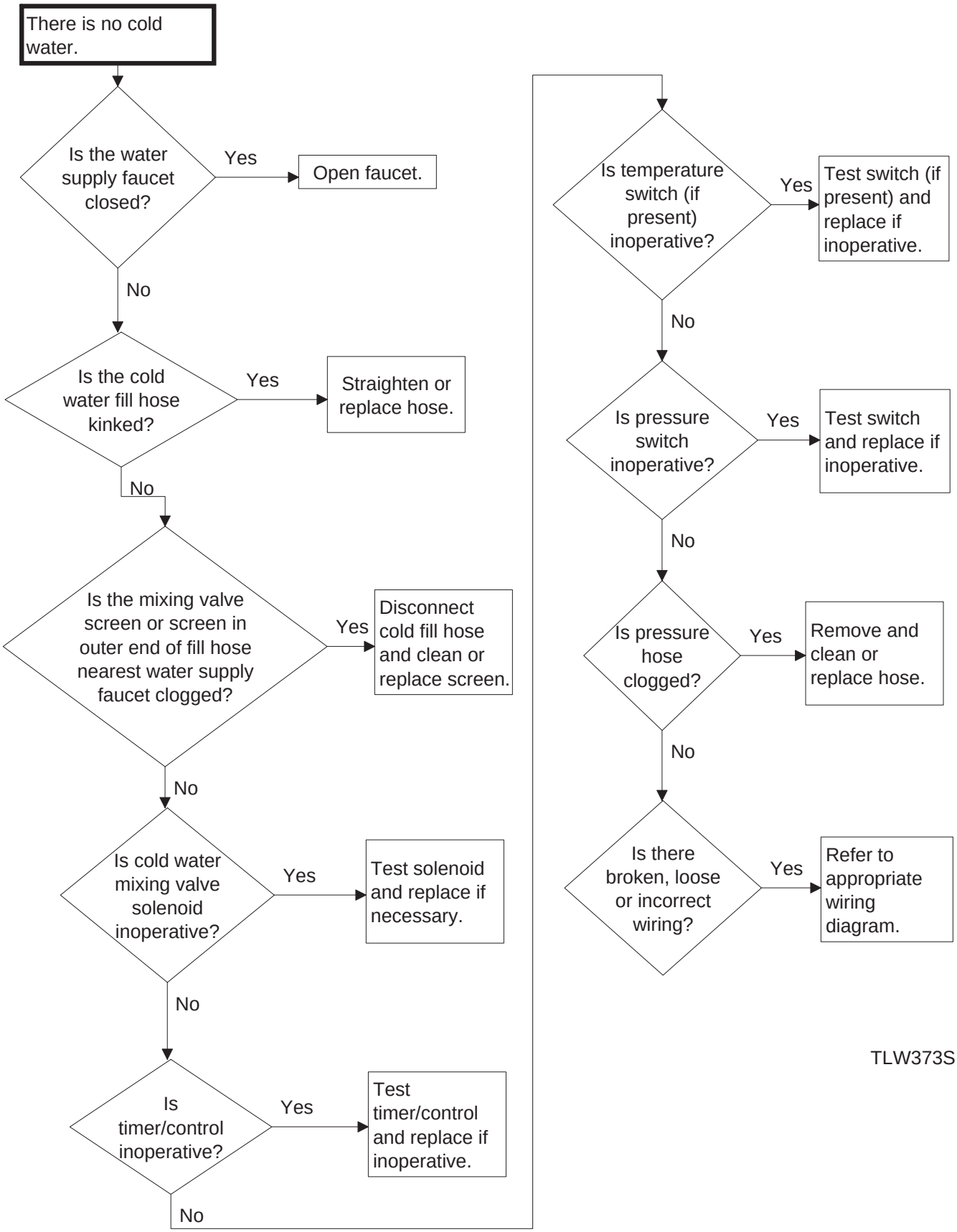

5. No Warm Water

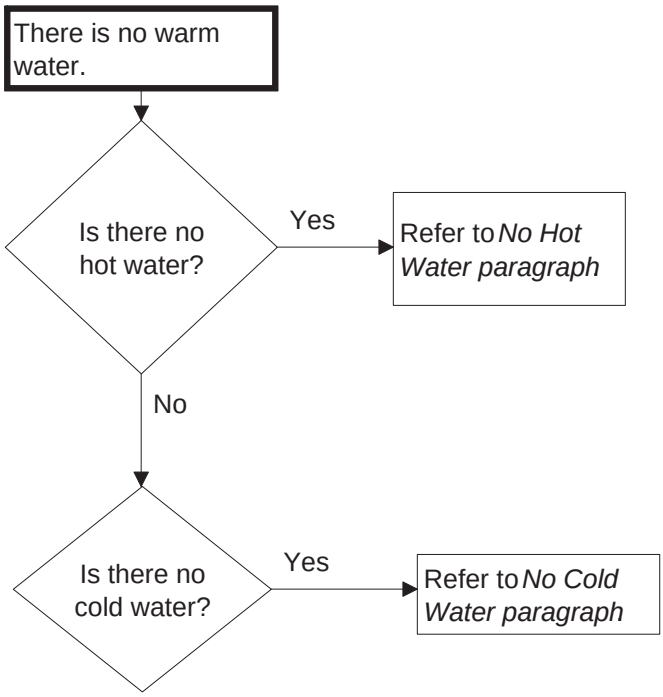

TLW362S

6. Water Fill Does Not Stop At Proper Level

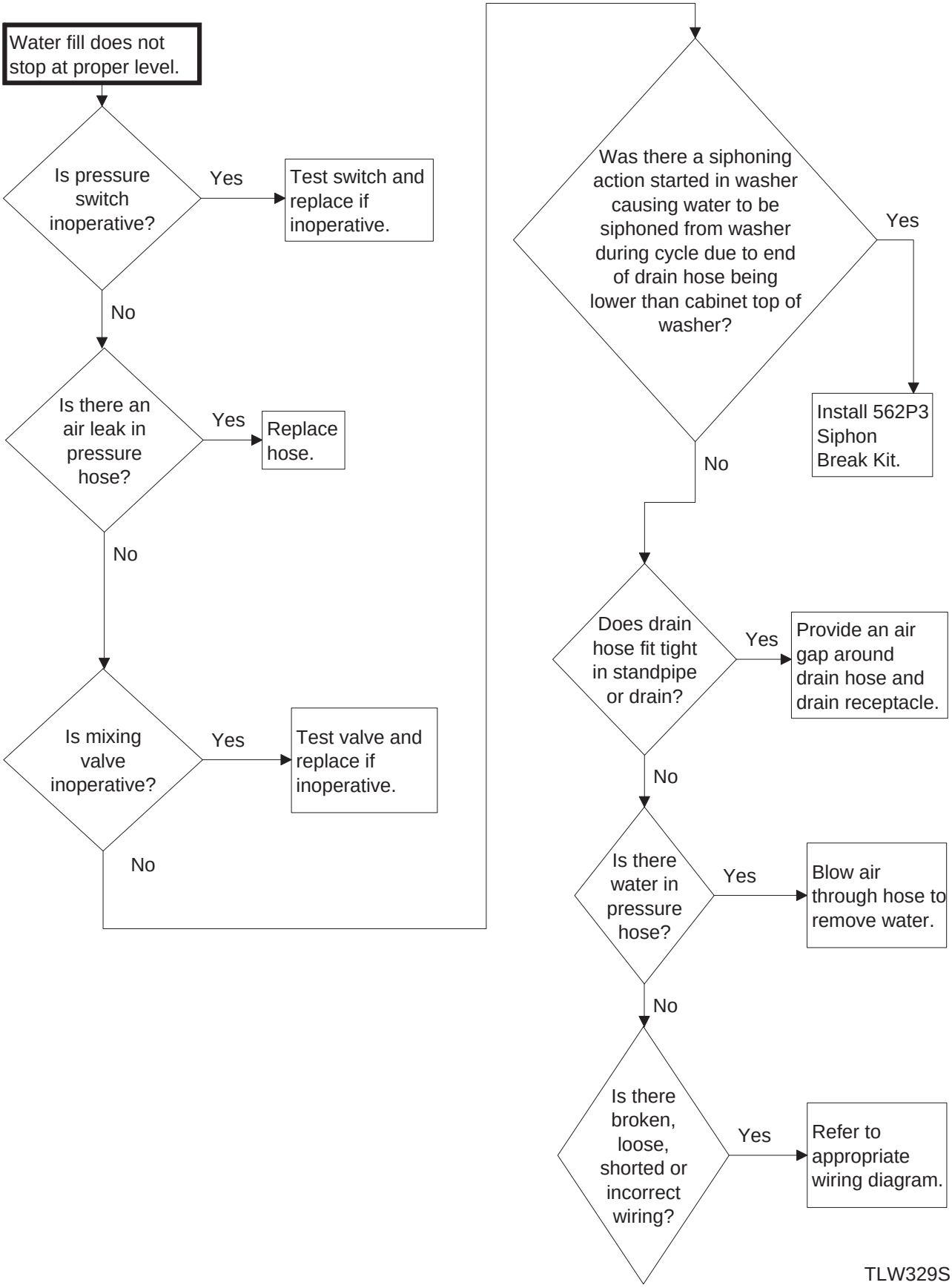

7. Timer Does Not Advance (Models with Timer Only)

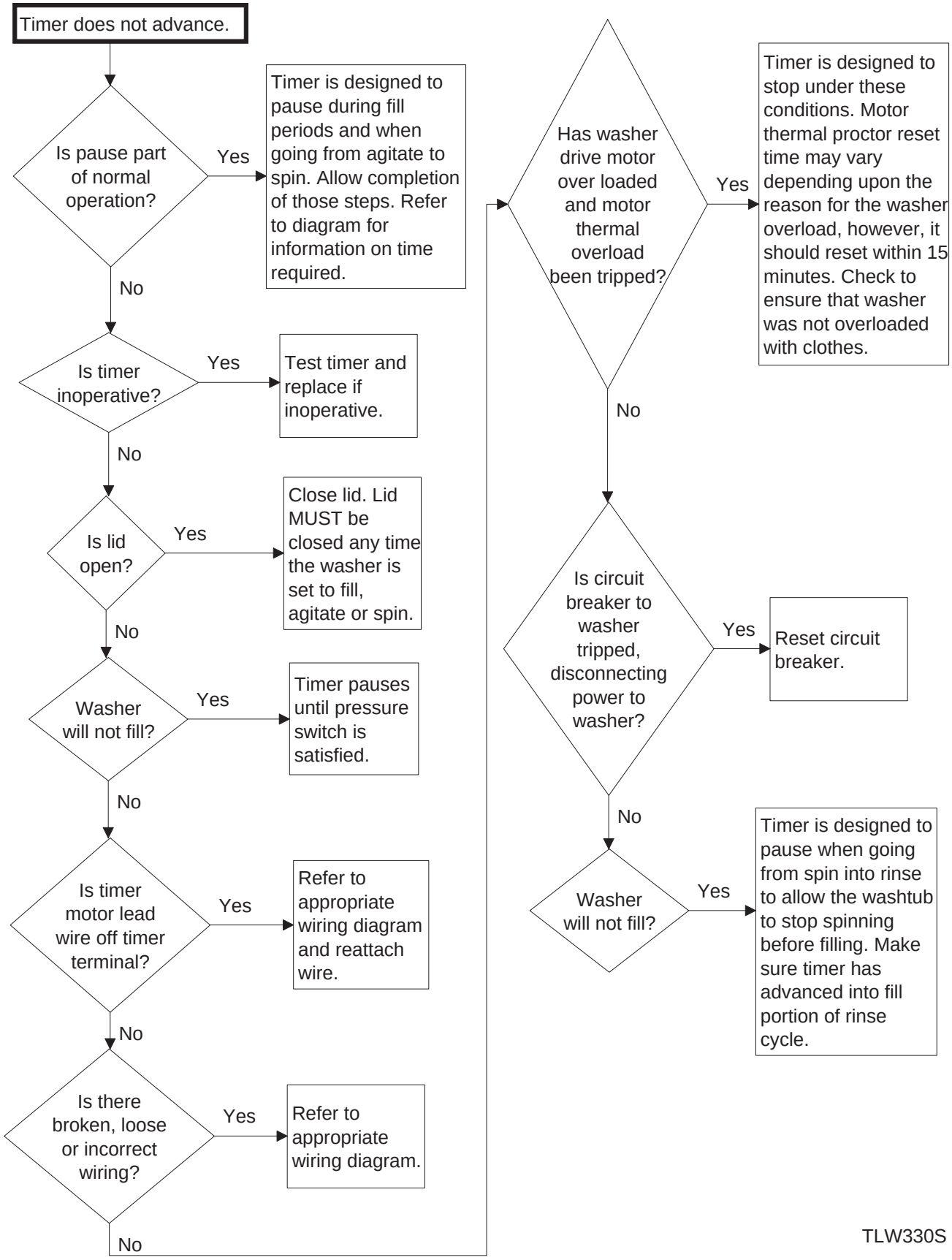

8. Motor Does Not Run

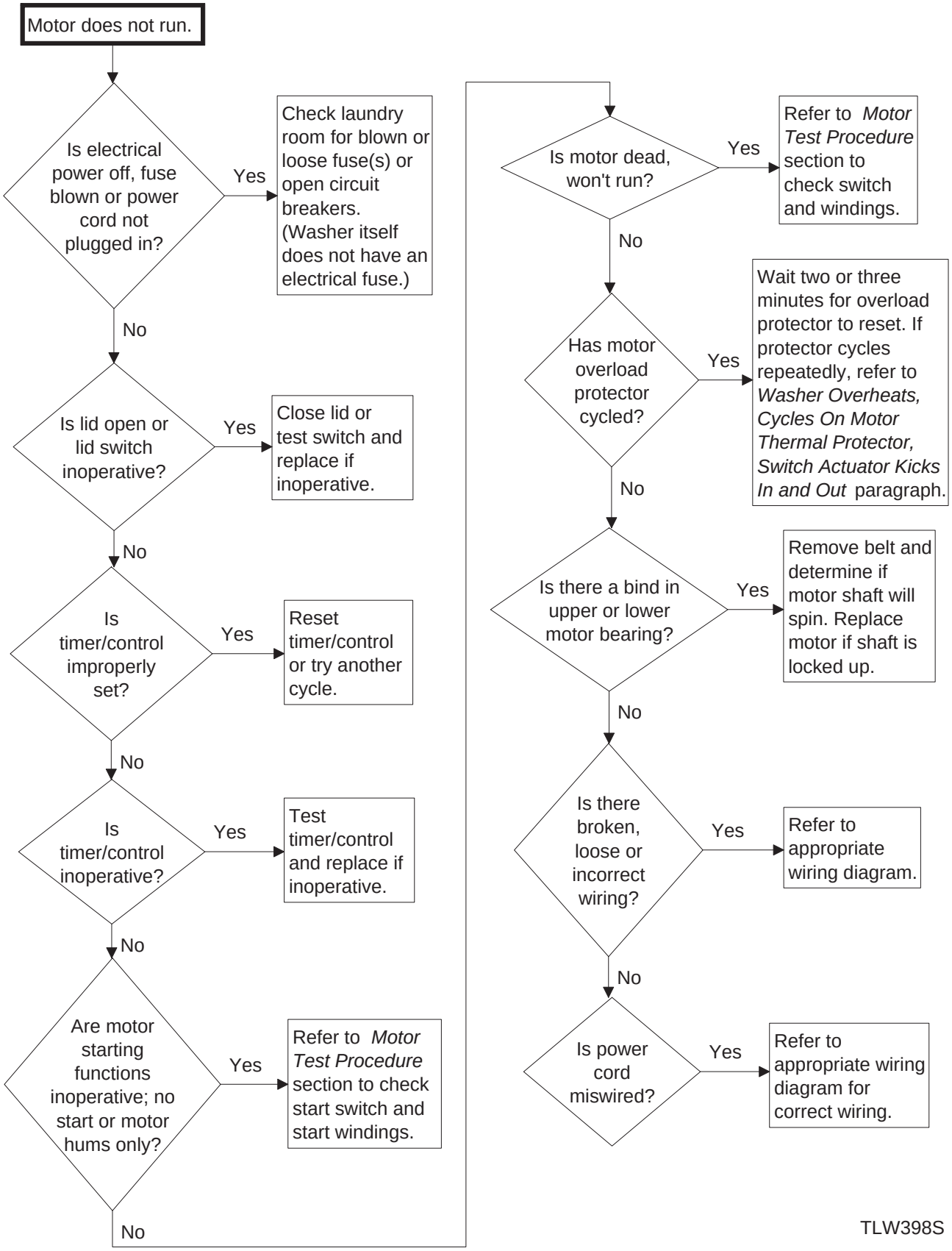

9. No Agitation

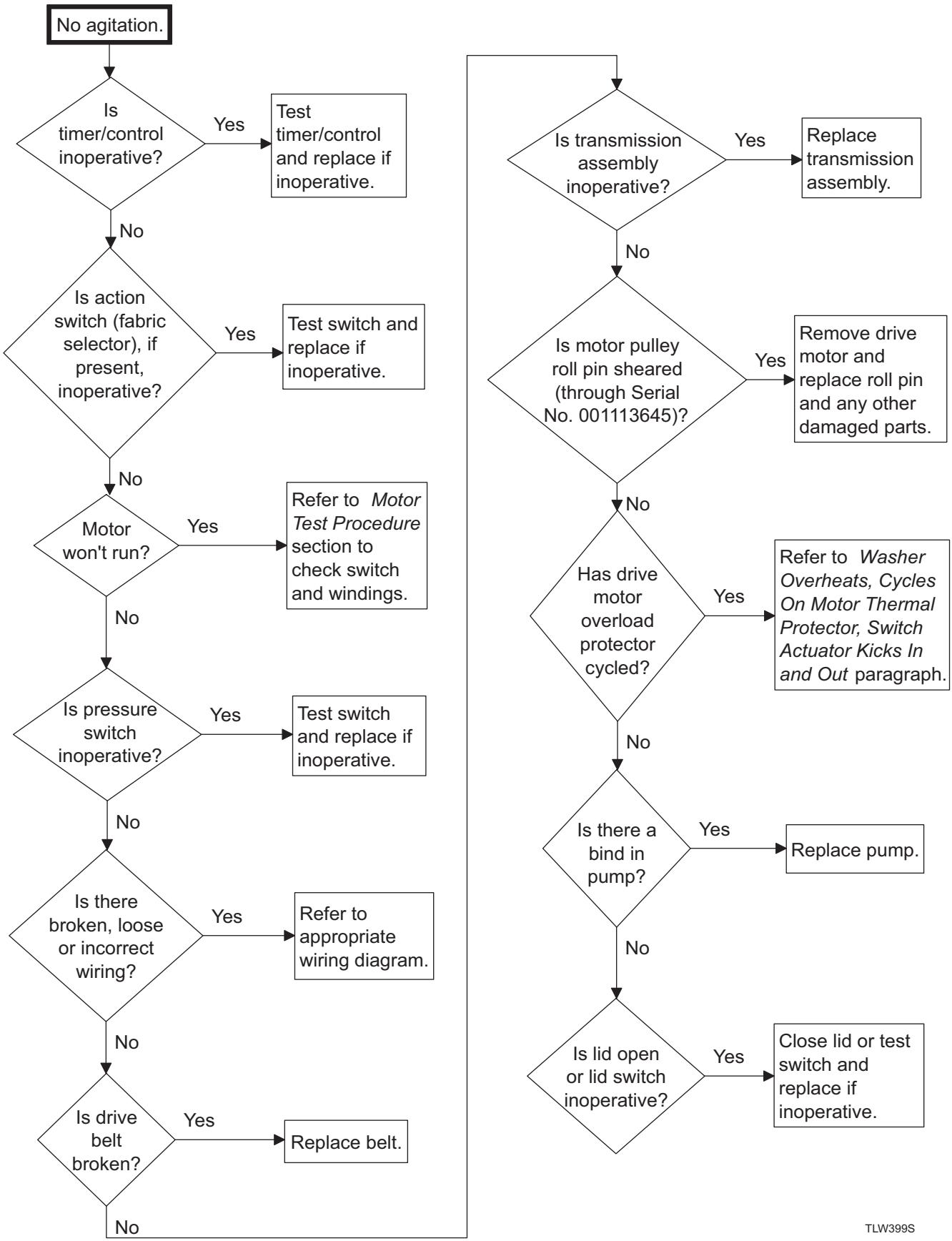

10. Constant Agitation

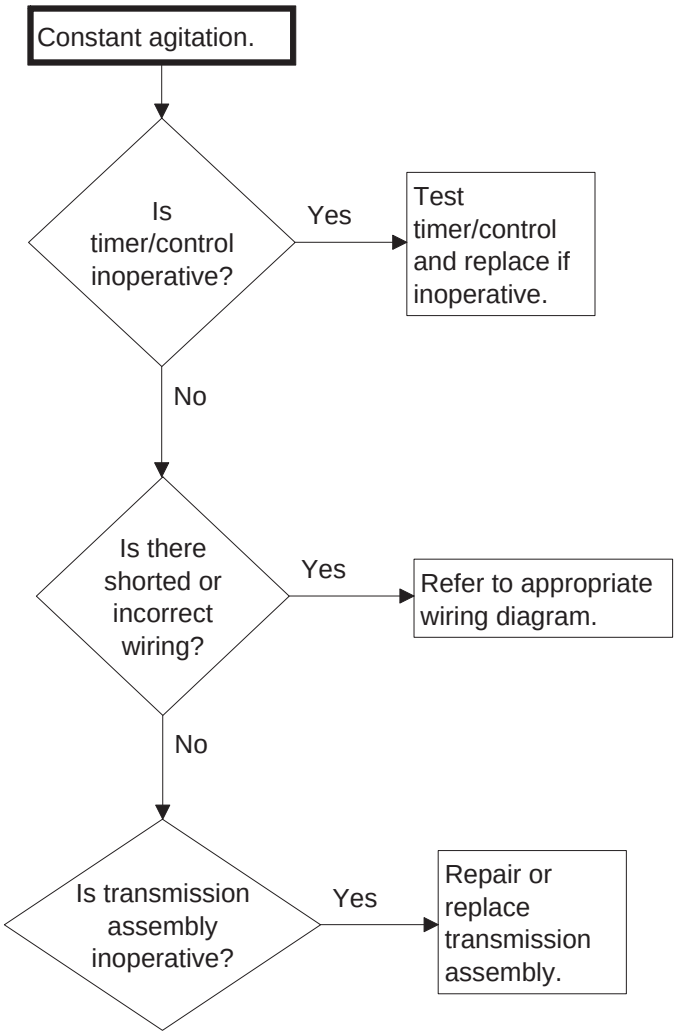

TLW333S

11. Washer Overheats, Cycles On Motor Thermal Protector, Switch Actuator Kicks In and Out

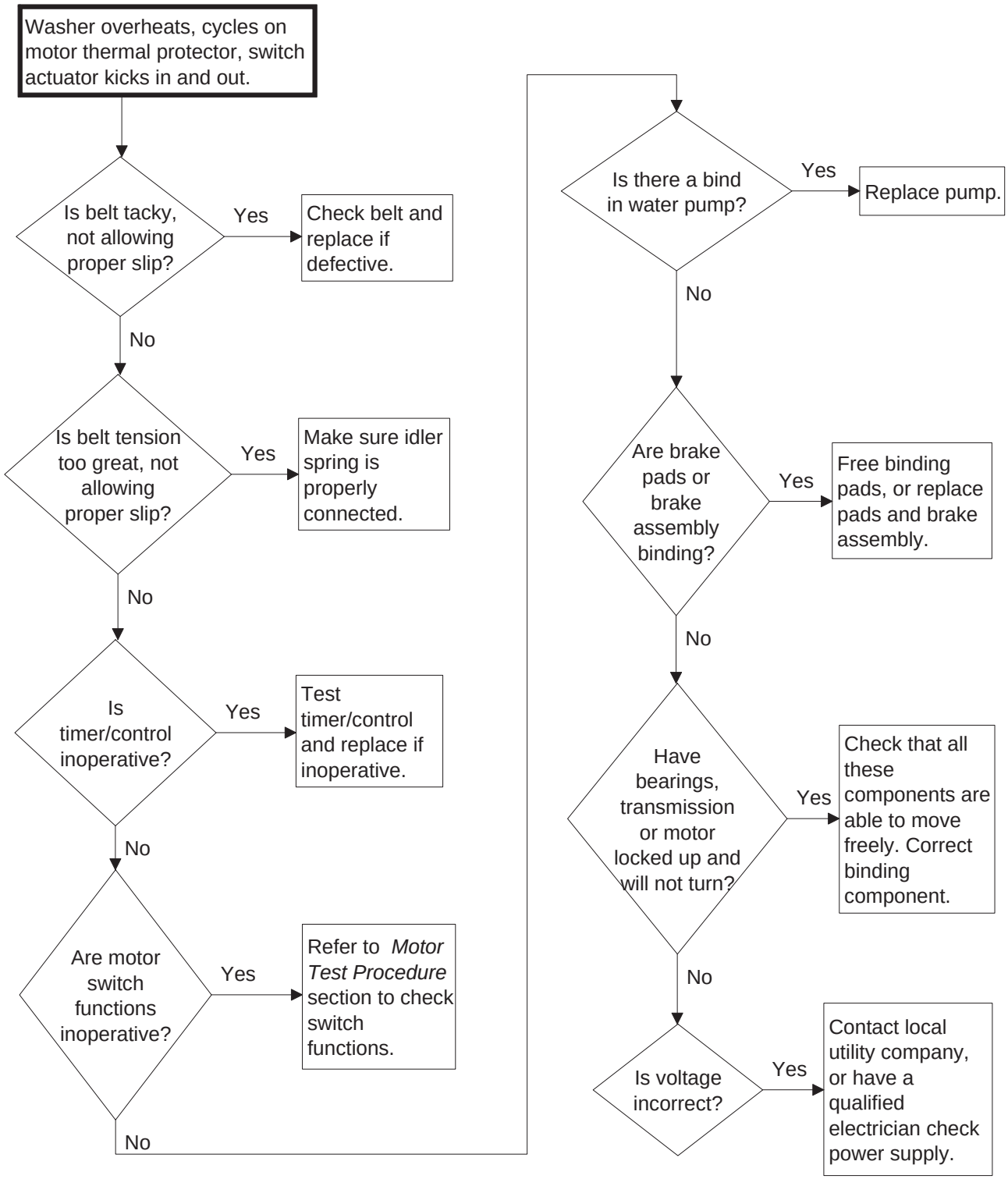

TLW334S

12. Slow Spin Or No Spin

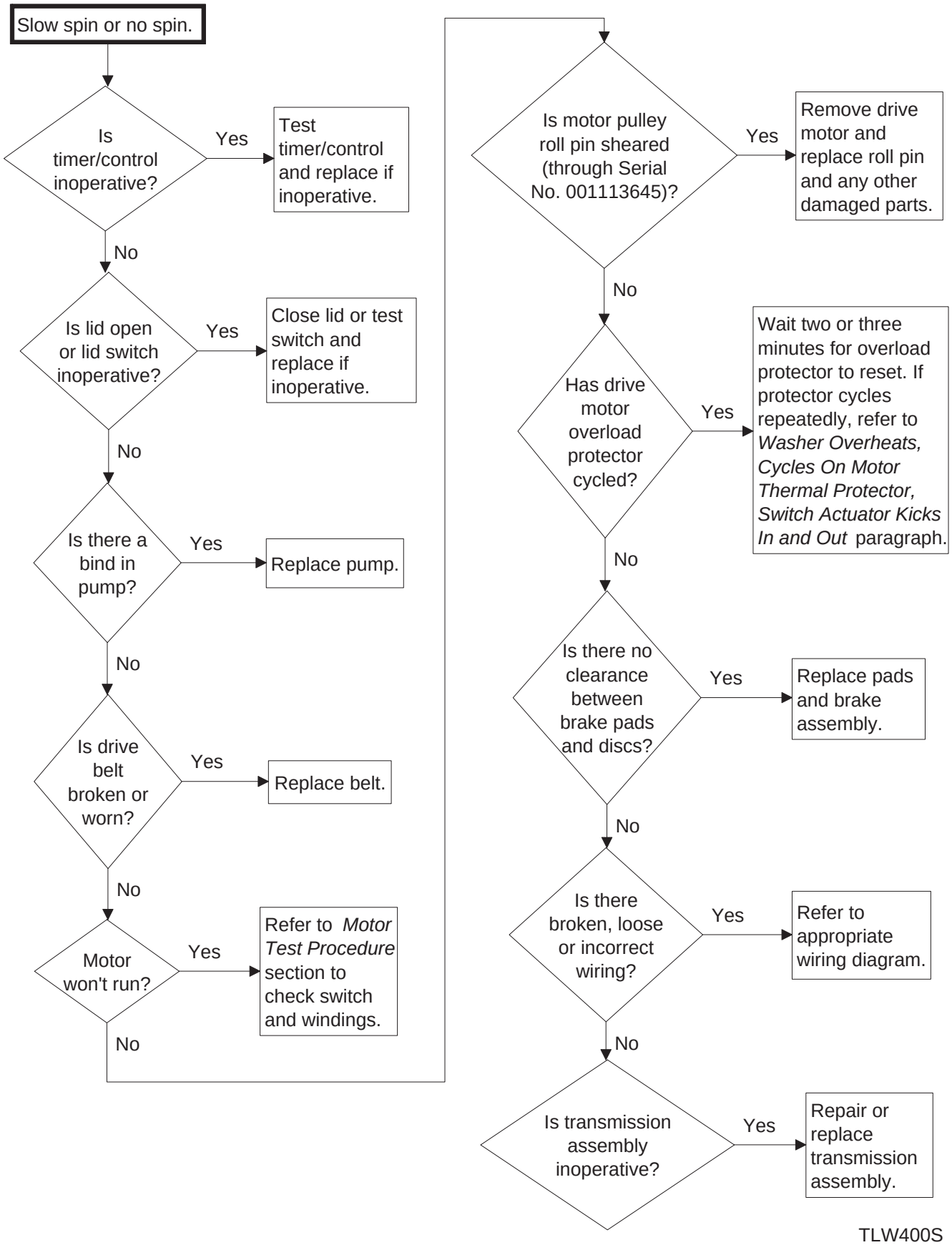

TLW400S

13. Constant Spin

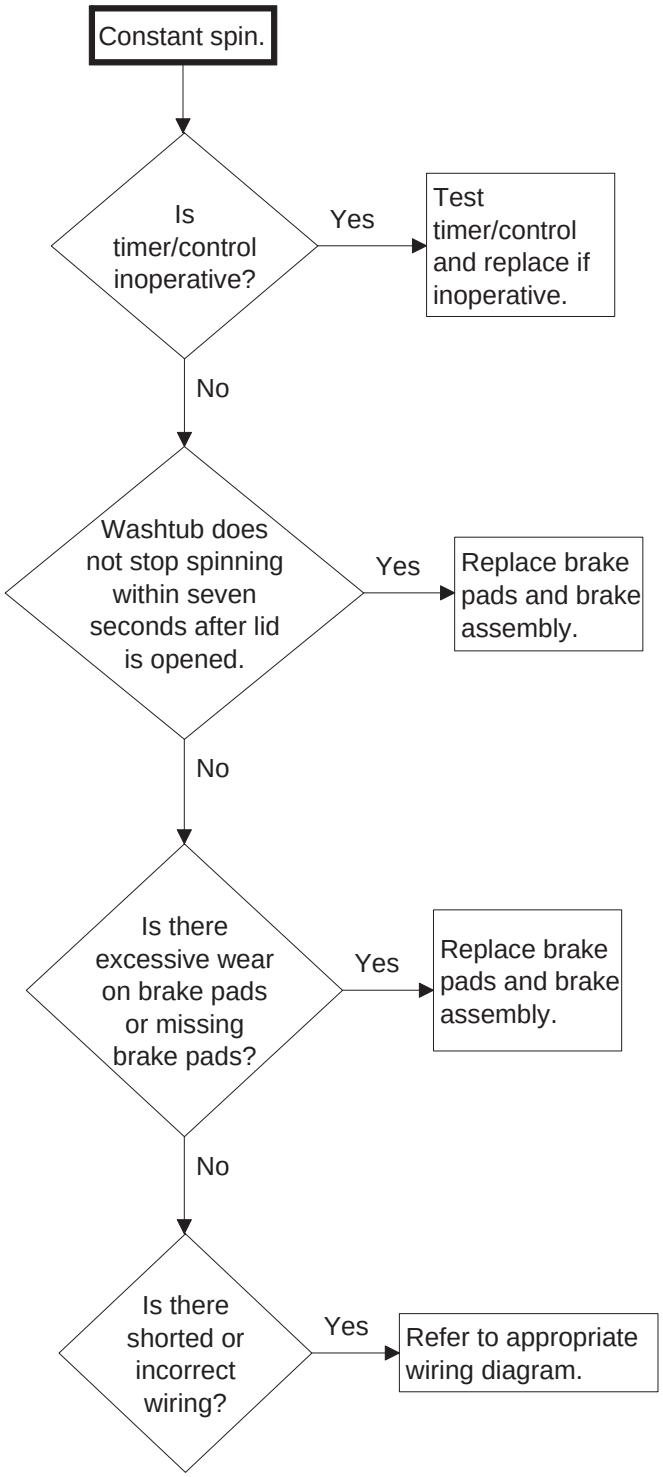

TLW336S

14. Washer Stops In Cycle; Quits After A Couple Loads; Is Intermittent

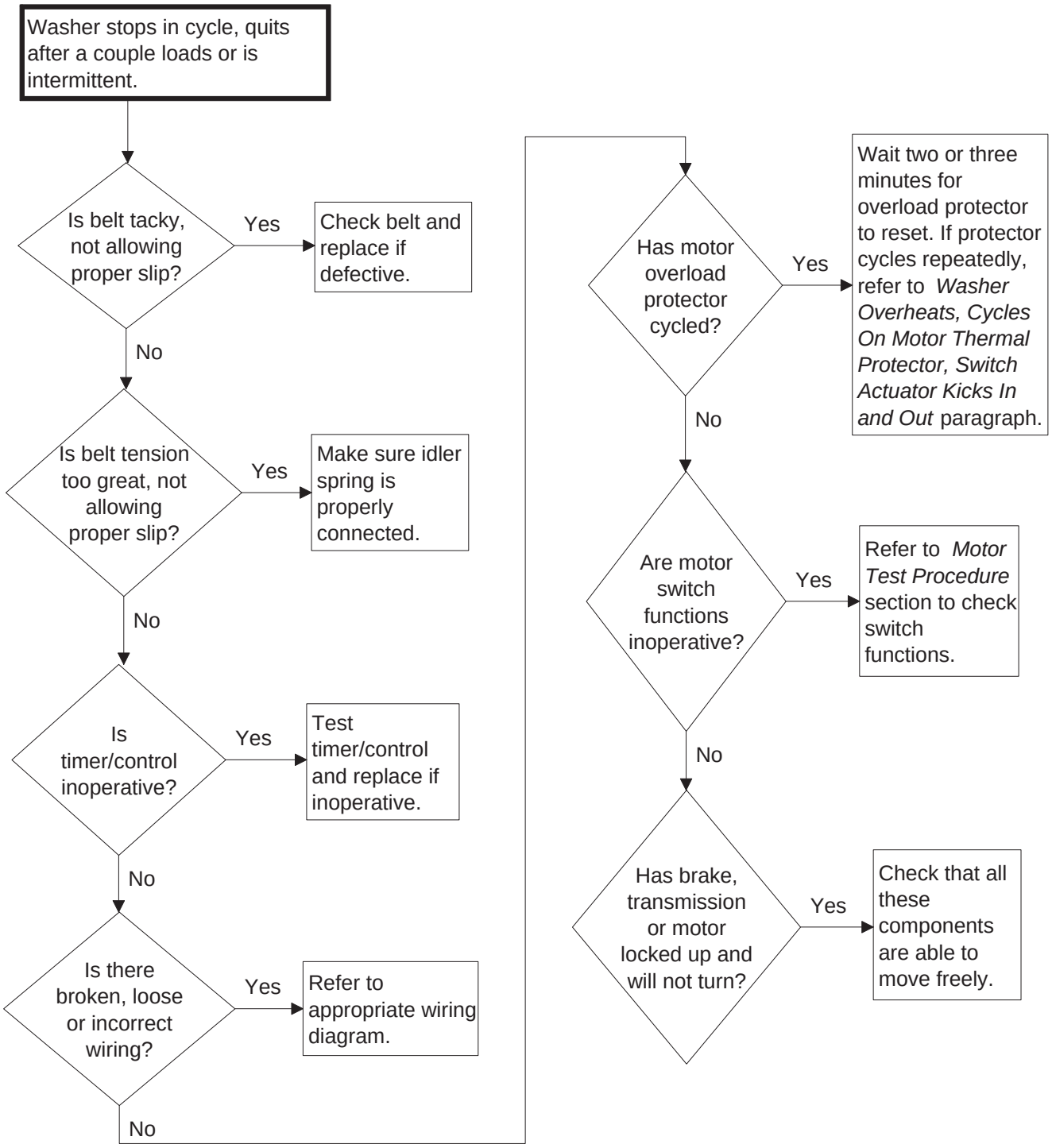

TLW401S

15. Washer Is Locked Up Or Binding

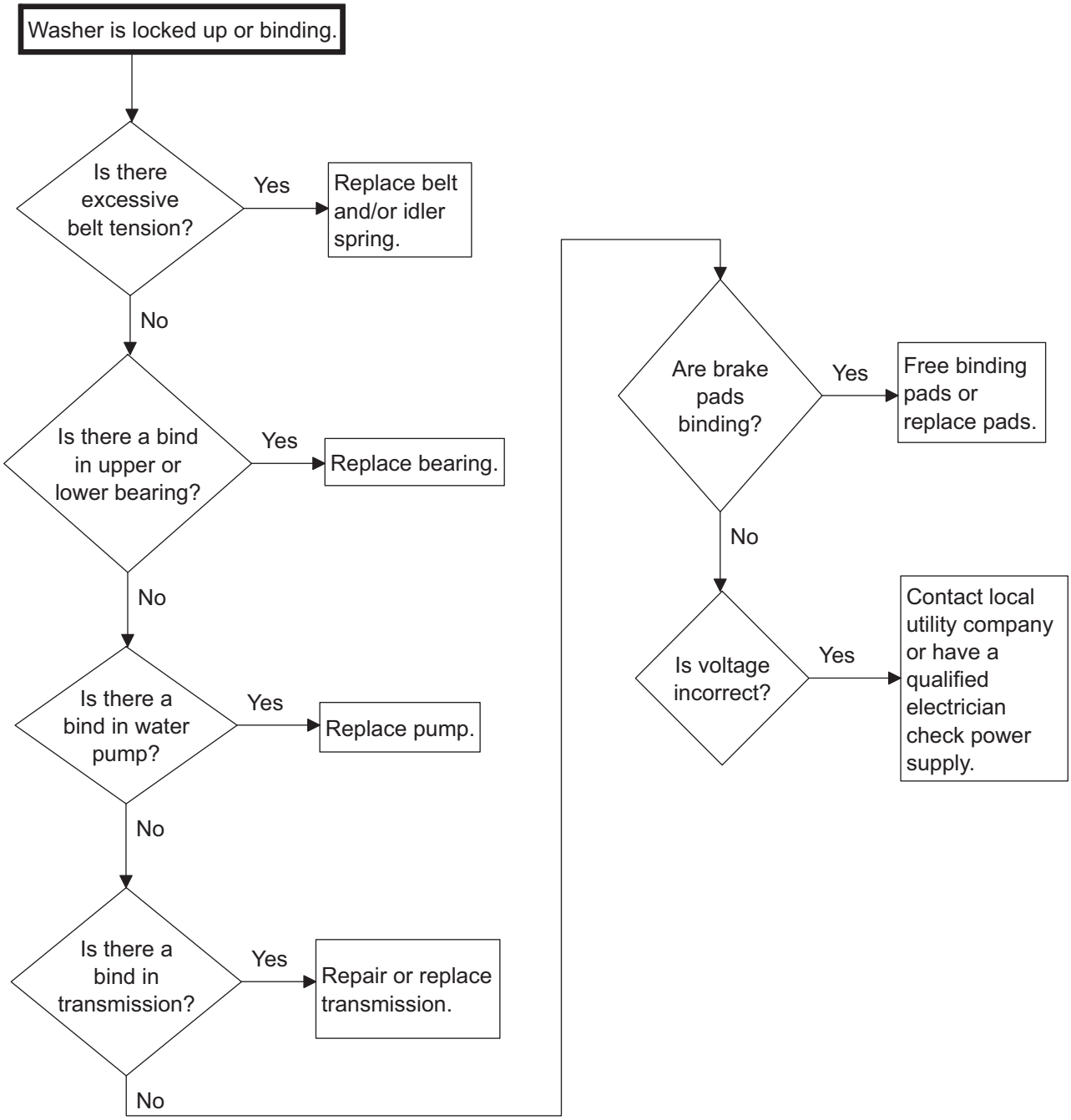

TLW338S

16. Outer Tub Does Not Empty

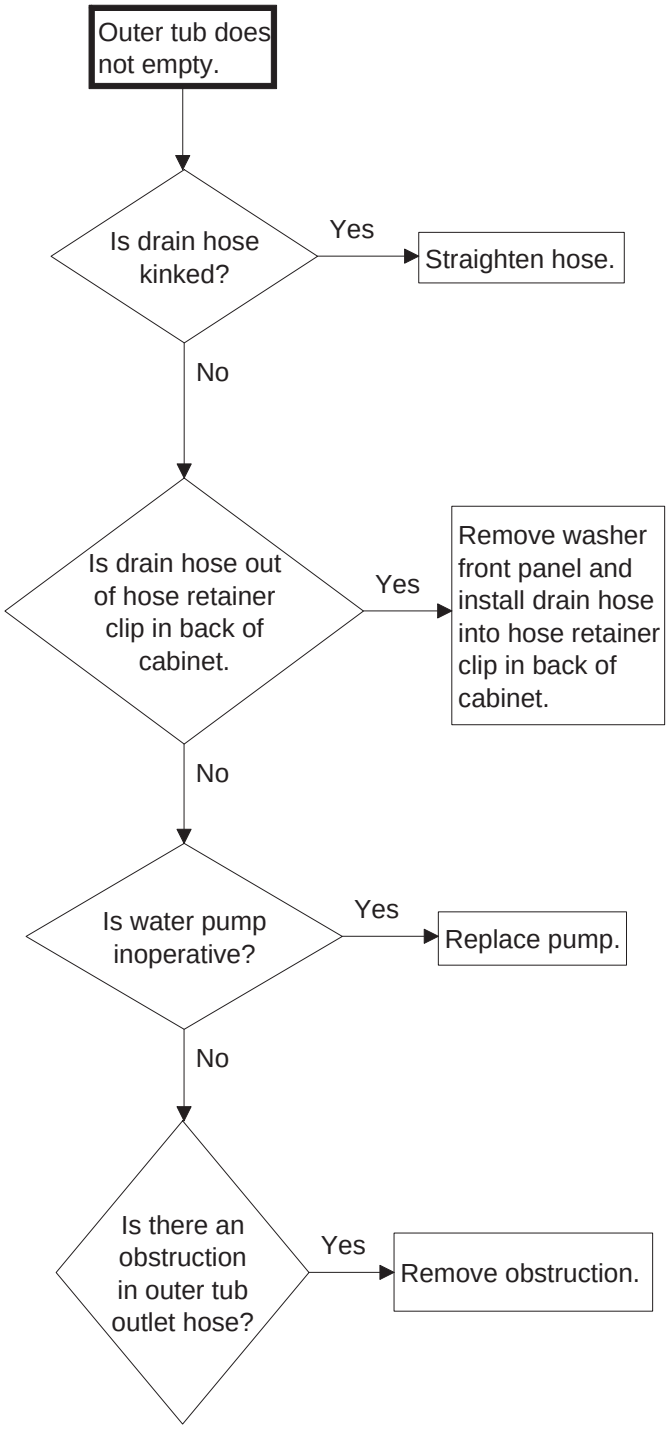

TLW339S

17. Excessive Vibration

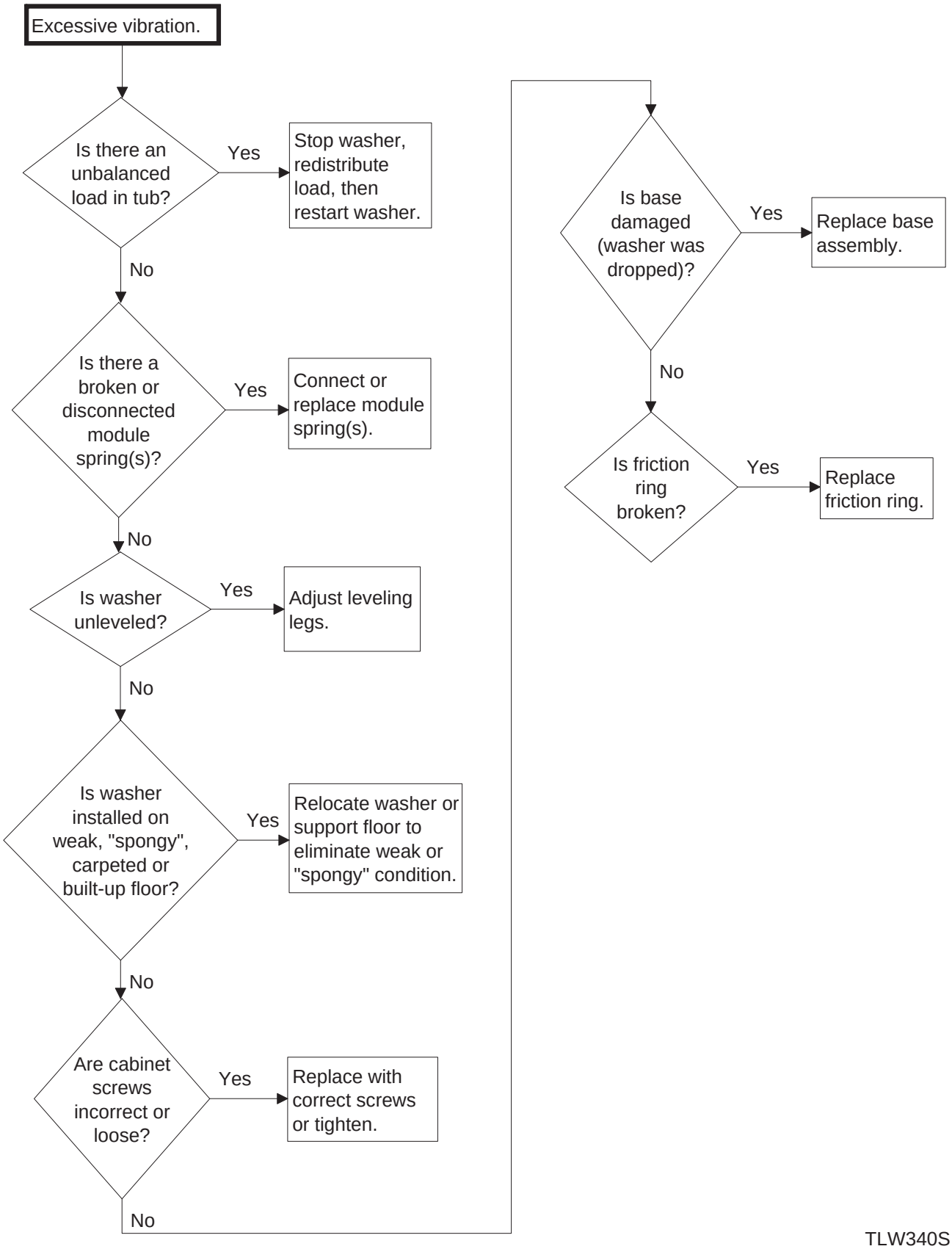

TLW340S

18. Water Leaking From Outer Tub

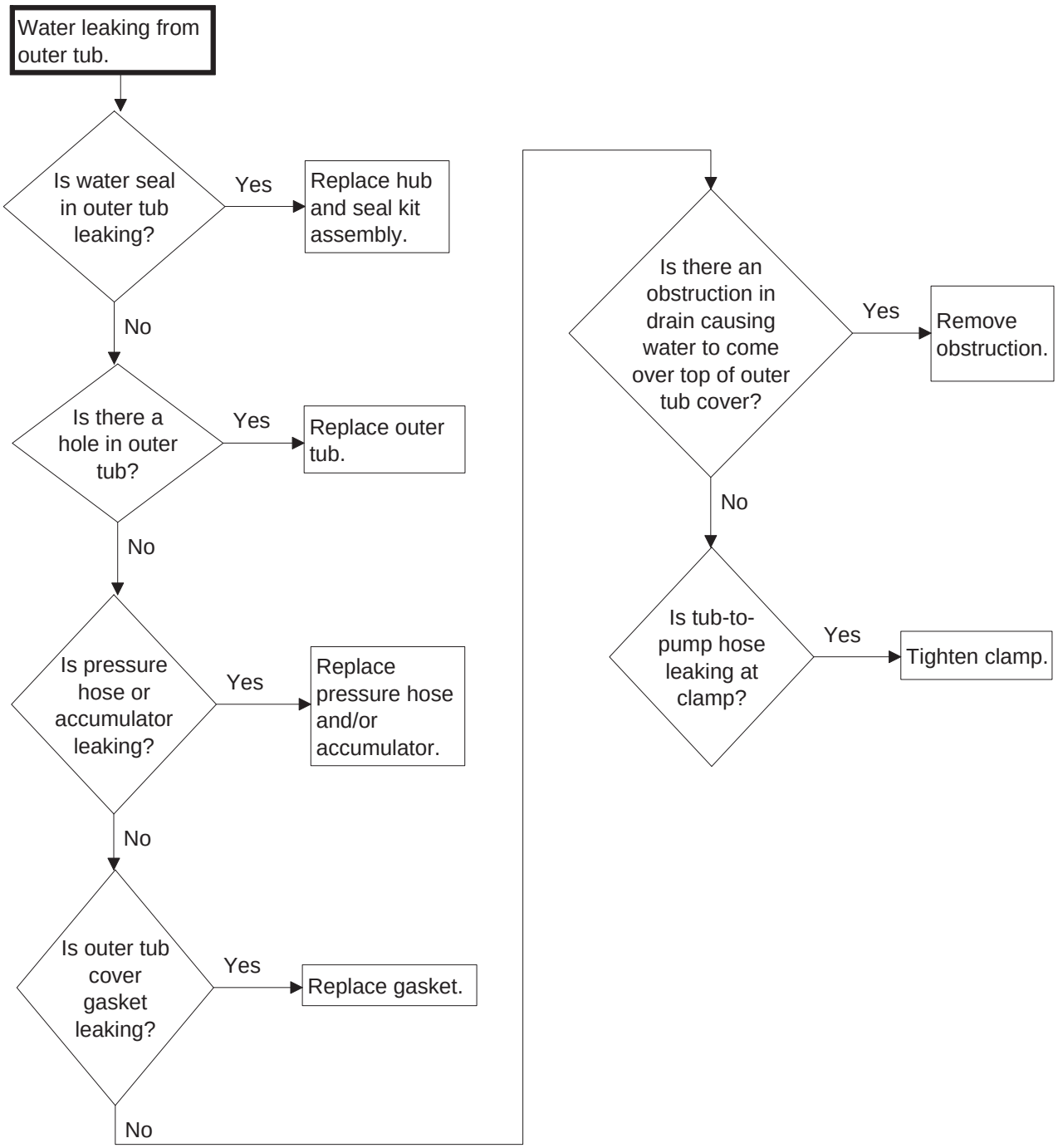

TLW341S

19. Troubleshooting Coin Drop

a. Non-Electronic Coin Drops:

When coin is placed into coin slot, the coin should roll down drop and be heard dropping into coin vault. If coin does not fall into coin vault or if coin drop sensor does not register that coin has been entered, follow troubleshooting instructions on the following page. Refer to *Figure 1* for path that coin follows when working properly.

IMPORTANT: Never use oil to correct coin drop problems. Oil residue will prevent coins from rolling properly.

IMPORTANT: Do not bend or damage mechanical parts within coin drop.

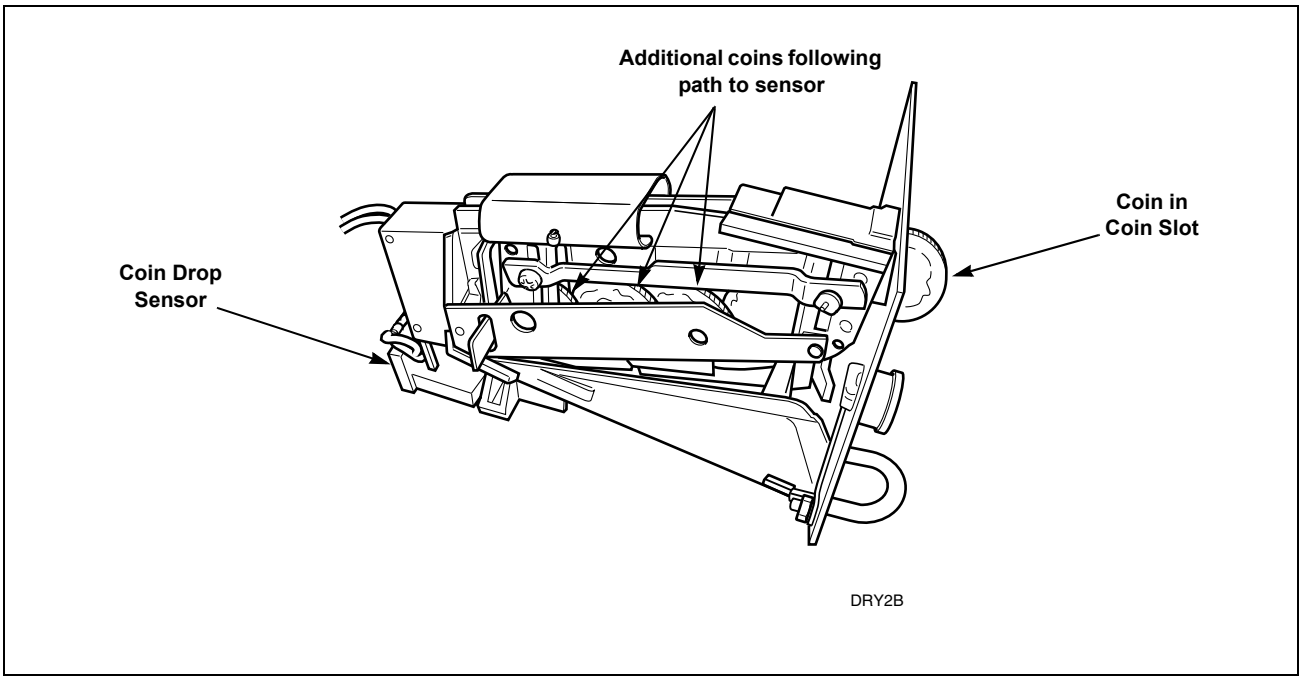

Figure 1

Troubleshooting Coin Drop

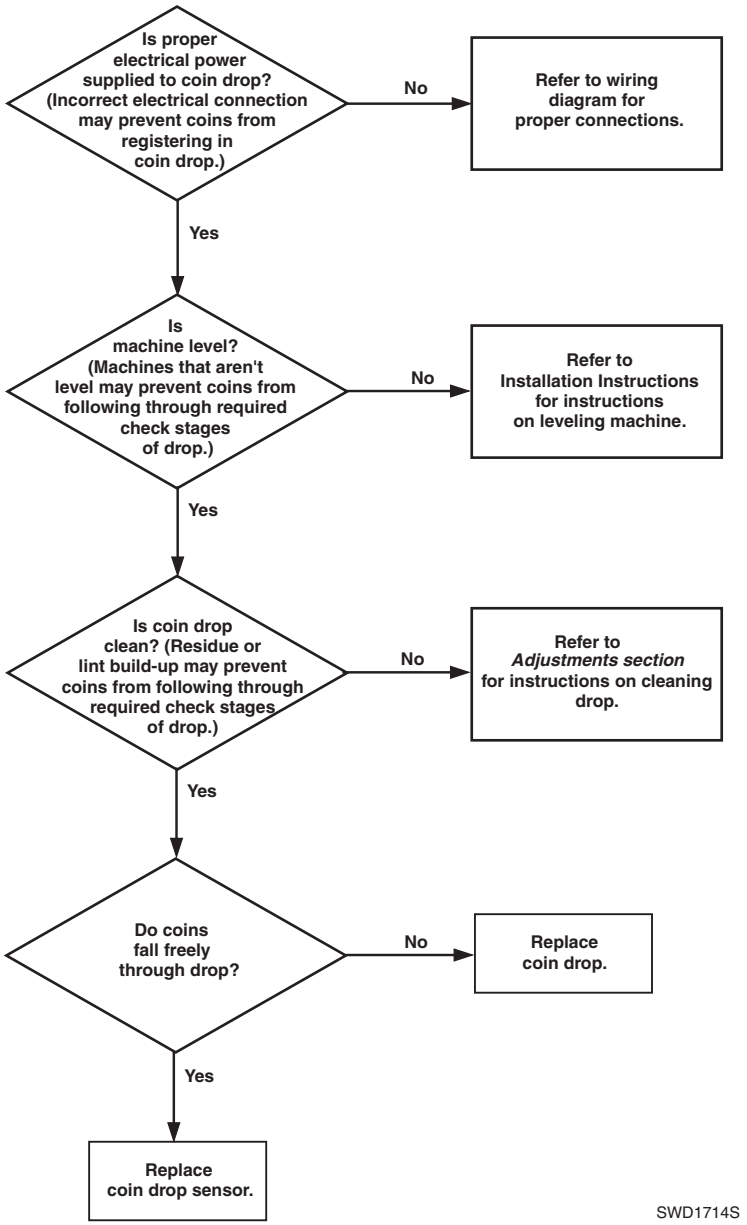

b. Electronic Coin Drops:

If coin drop is not accepting coins, perform the following:

(1) Clean coin drop. Refer to *Paragraph 62*.
(2) On electronic coin drops with an old-style tension spring (shown in *Figure 2* and *Figure 4*), test and replace tension spring using the following instructions.

Remove Coin Drop From Machine

(1) Disconnect electrical power to machine and drop.
(2) Remove coin drop from machine.

Test Tension Spring

(1) Push coin return button to open and close coin drop cover to clear possible coin jams. Refer to *Figure 2*.

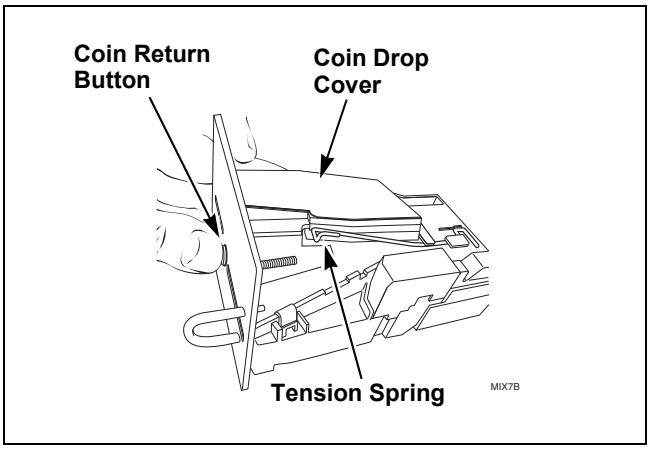

Figure 2

(2) Manually hold down coin drop cover and insert coin. Refer to *Figure 3*.

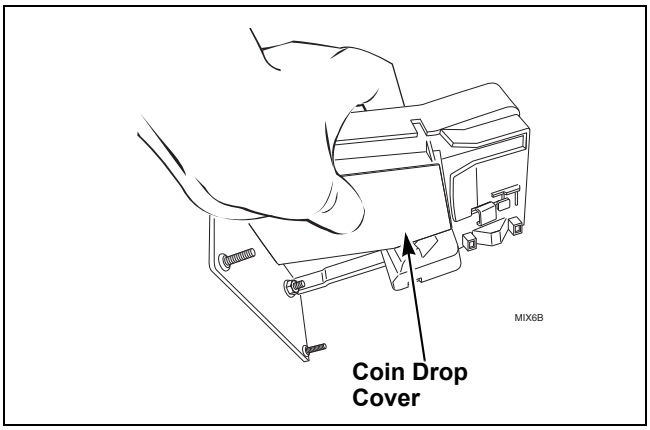

Figure 3

(3) If coin drop now operates properly, replace tension spring using instructions on following pages.

Replace Tension Spring

(1) Move tension spring downward until cover catch is free. Refer to *Figure 4*.

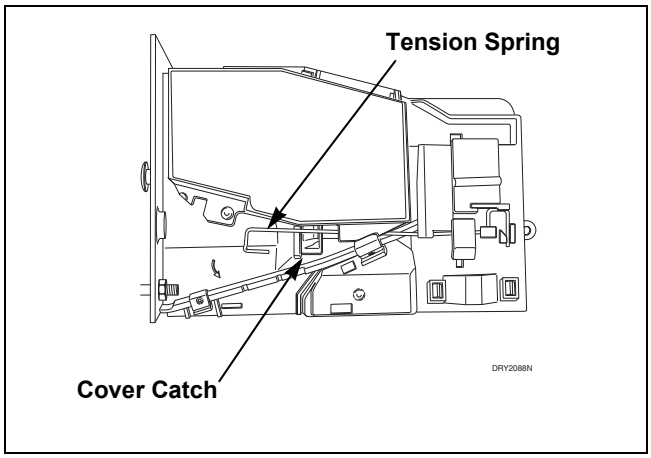

Figure 4

(2) Open cover for coin drop.
(3) Place a small flathead screwdriver under right side of tension spring and lift up. Refer to *Figure 5*.

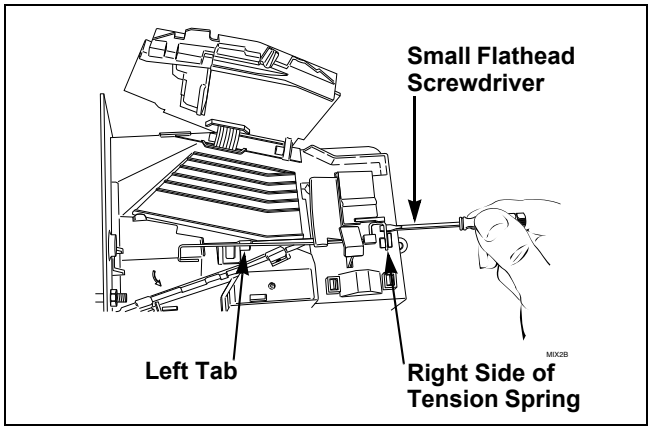

Figure 5

(4) Use screwdriver to move spring approximately 3 mm to left.
(5) Lift spring over left tab. Refer to *Figure 5*.

(6) Rotate spring clockwise, 40 to 60 degrees, until it is free from right tabs. Refer to *Figure 6*.

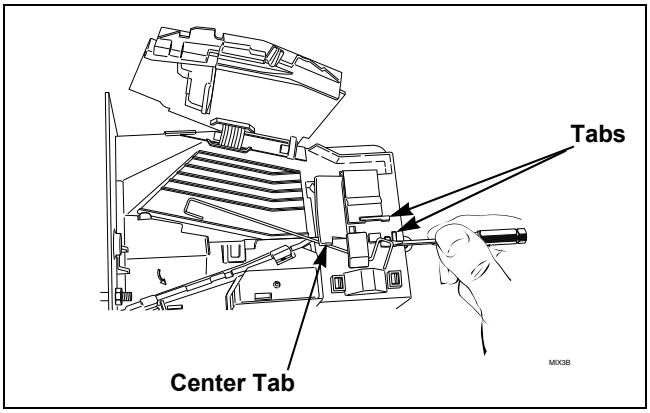

Figure 6

(7) Use screwdriver to remove spring from center tab. Refer to *Figure 6*.
(8) Lift spring, with attached clip, off drop.
(9) Remove clip from spring. Refer to *Figure 7*.

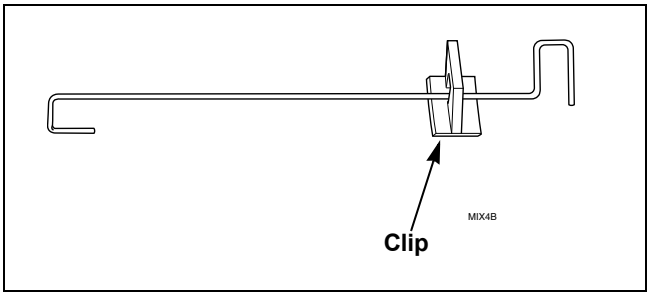

Figure 7

(10) Attach clip to new tension spring, Part No. 209/00598/02.
(11) Place clip, installed on spring, in slot on coin drop. Refer to *Figure 8*.

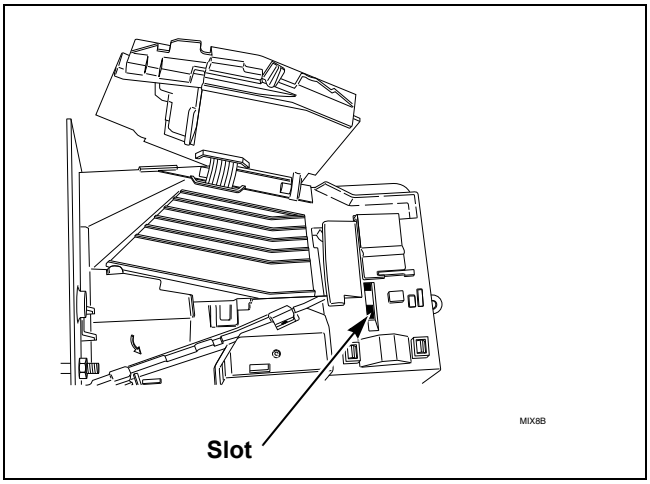

Figure 8

(12) Use a small flathead screwdriver to push spring under center tab. Refer to *Figure 9*.

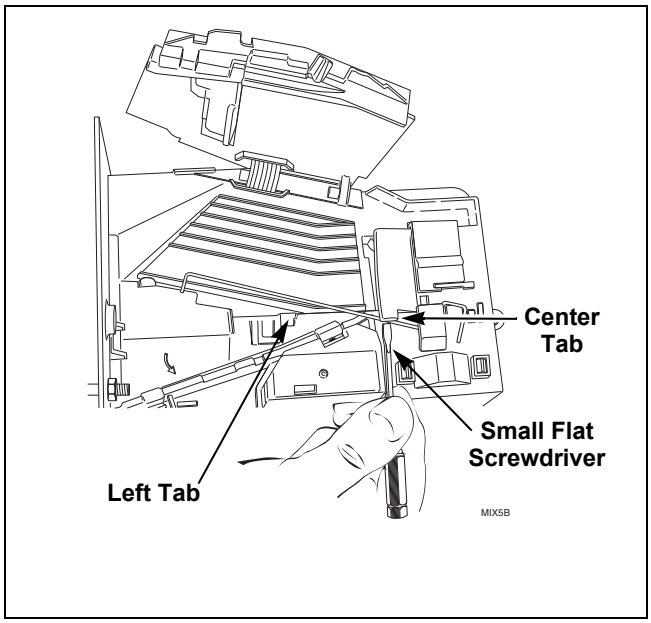

Figure 9

(13) Lift spring gently to place in position under left tab.
(14) Push spring to right until it snaps into position. Refer to *Figure 5*.
(15) Close coin drop cover.
(16) Move tension spring over cover catch. Refer to *Figure 4*.

Reinstall Coin Drop Into Machine

(1) Reinstall coin drop into machine.
(2) Reconnect electrical power to machine and drop.
(3) Add a coin to drop to verify that coin drop is operating properly and that electrical connection is working properly.

Troubleshooting

Coin Slide Operated and Non-Metered Models with “8”, “9”, “M” or “S” in the 4th Character of the Model Number

WARNING

To reduce the risk of electric shock, fire, explosion, serious injury or death:
- **Disconnect electric power to the washer before servicing.**
- **Never start the washer with any guards/panels removed.**
- **Whenever ground wires are removed during servicing, these ground wires must be reconnected to ensure that the washer is properly grounded.**

W003

20. Error Mode

In Error Mode, the *IN USE* LED flashes to display fill and drain errors (refer to paragraphs below). Error Mode can only be exited by powering down washer.

Fill Error

A Fill Error will occur if the tub does not fill within 62 minutes of the start of the cycle. A Fill Error is indicated by the control repeatedly flashing the *IN USE* LED twice separated by a one and a half second pause until the control is powered down. If Error Mode is turned off, the fill error will not occur and the control will continue to wait for the fill level to be reached.

Drain Error

A Drain Error will occur if the tub is not empty after a spin cycle. A Drain Error is indicated by the control repeatedly flashing the *IN USE* LED three times separated by a one and a half second pause until the control is powered down. If Error Mode is turned off, the drain error will not occur and the machine cycle will advance to the next cycle step as though the water had been pumped out.

21. Coin Slide Can Not Fully Insert

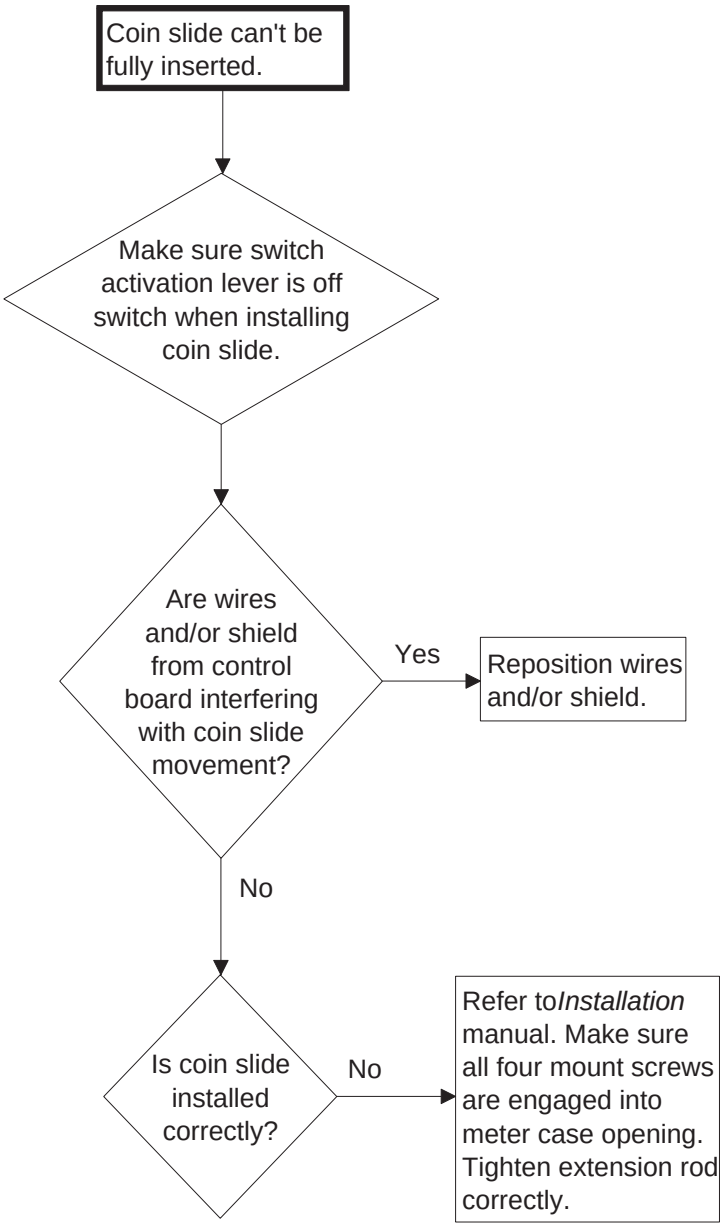

TLW1836B

22. Coin Slide Fully Inserts, Switch Does Not Activate

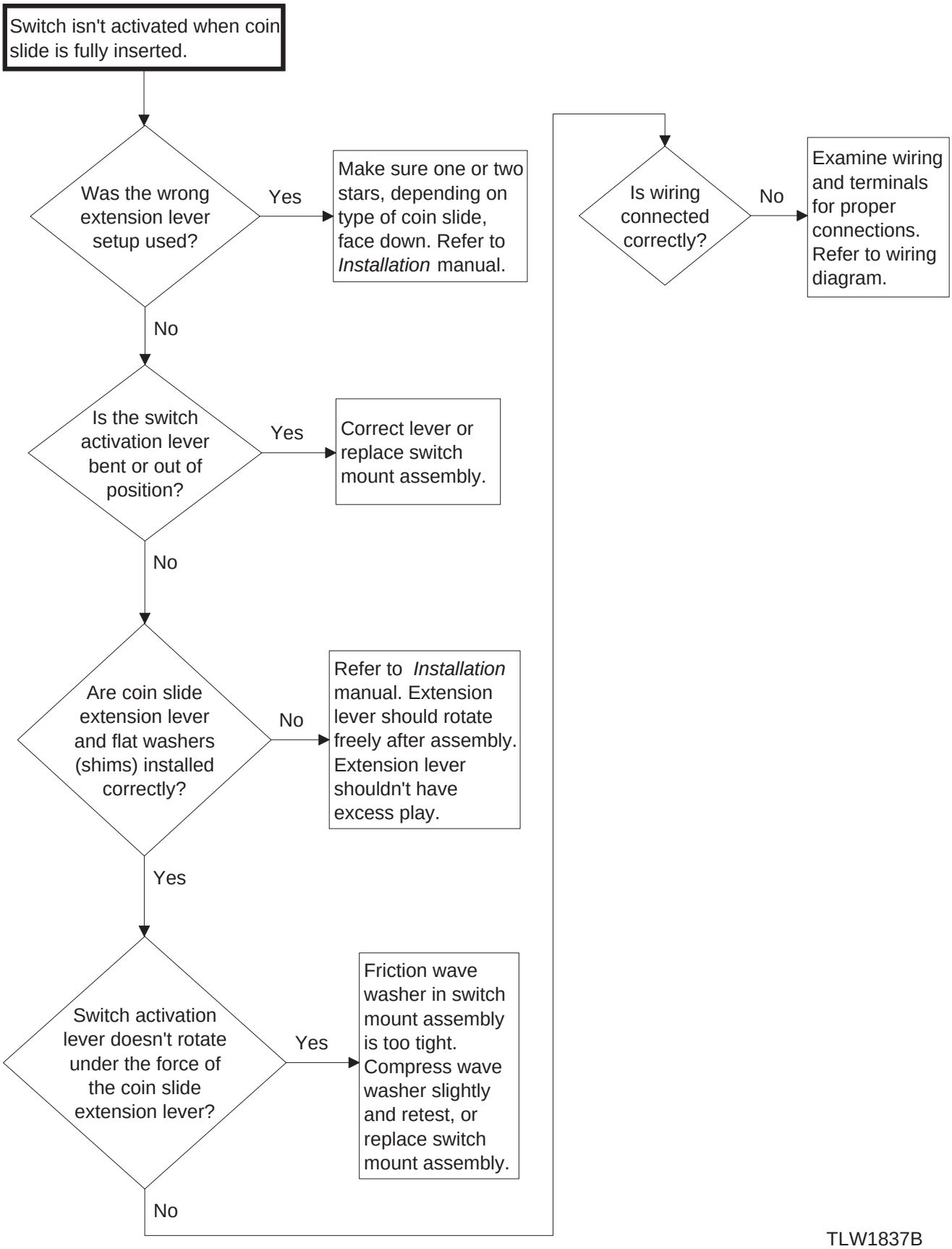

TLW1837B

23. Switch Is Activated Too Soon

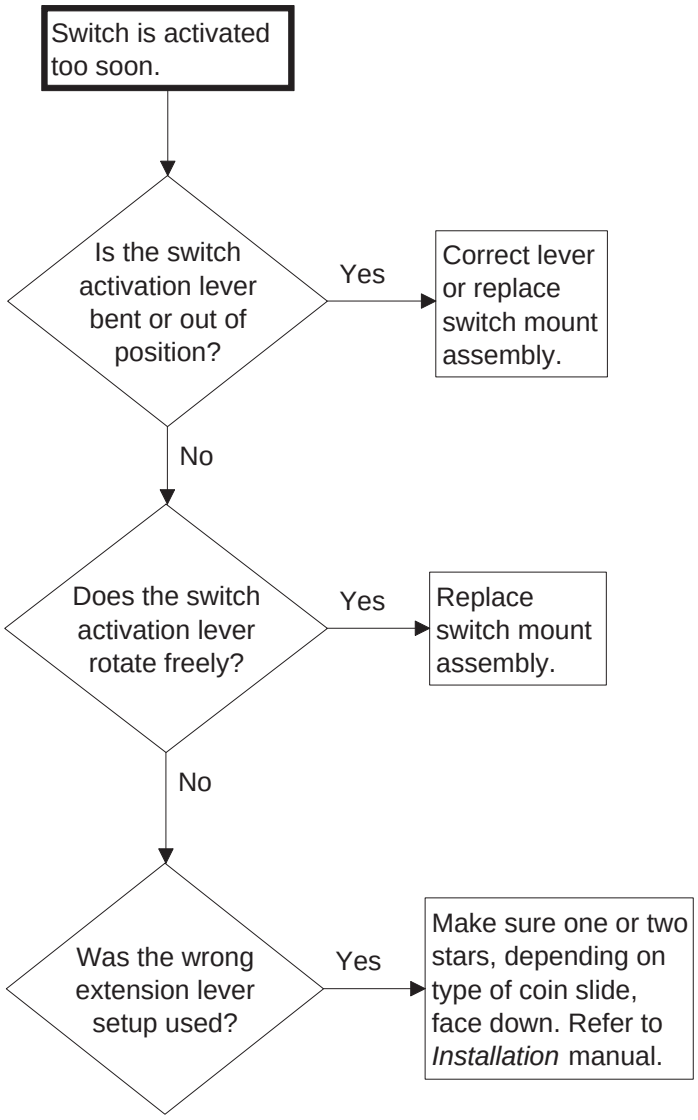

TLW1838B

24. Coin Slide Does Not Return Freely

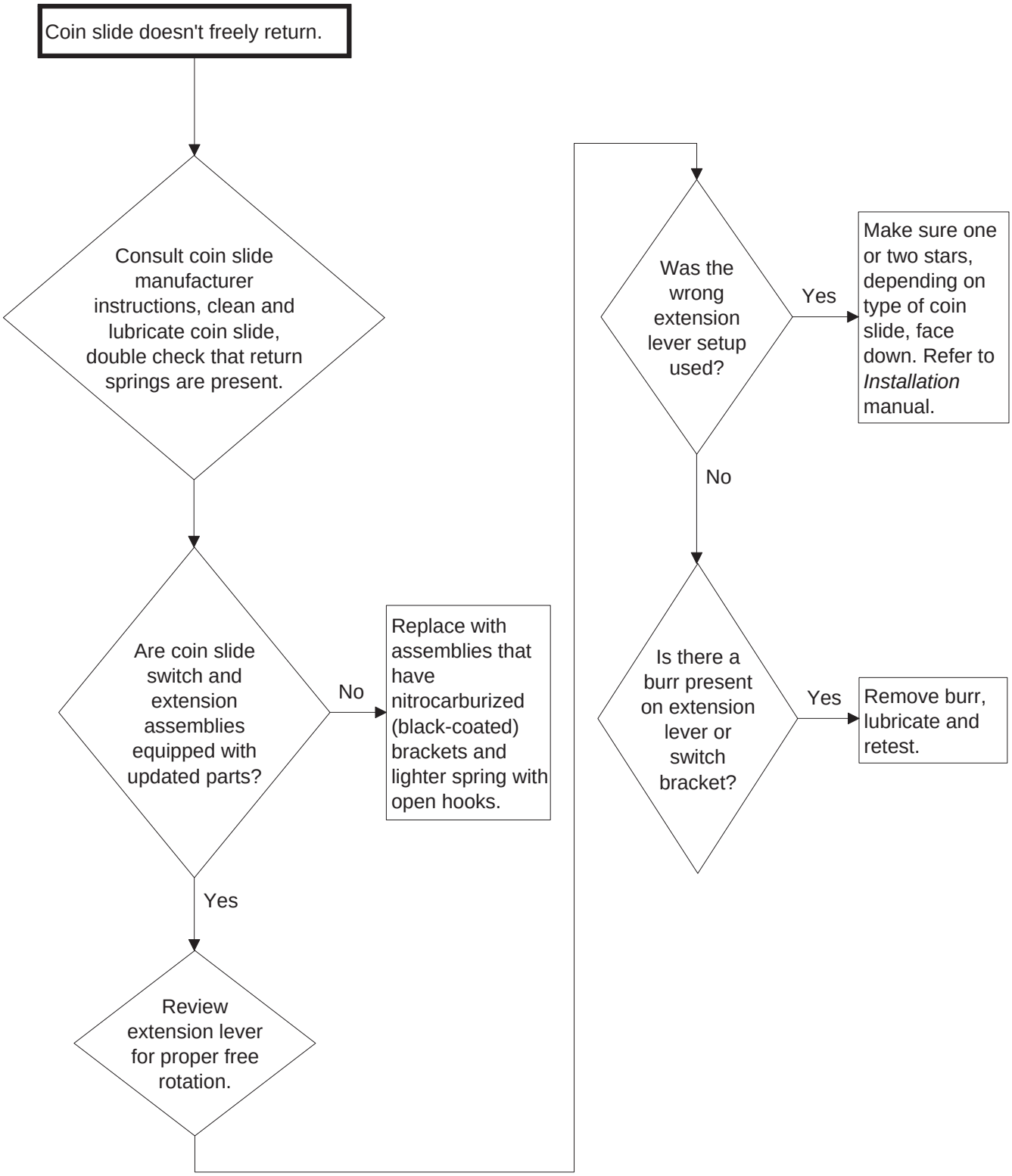

TLW376S

25. No Cycle Start When the Coin Slide is Activated

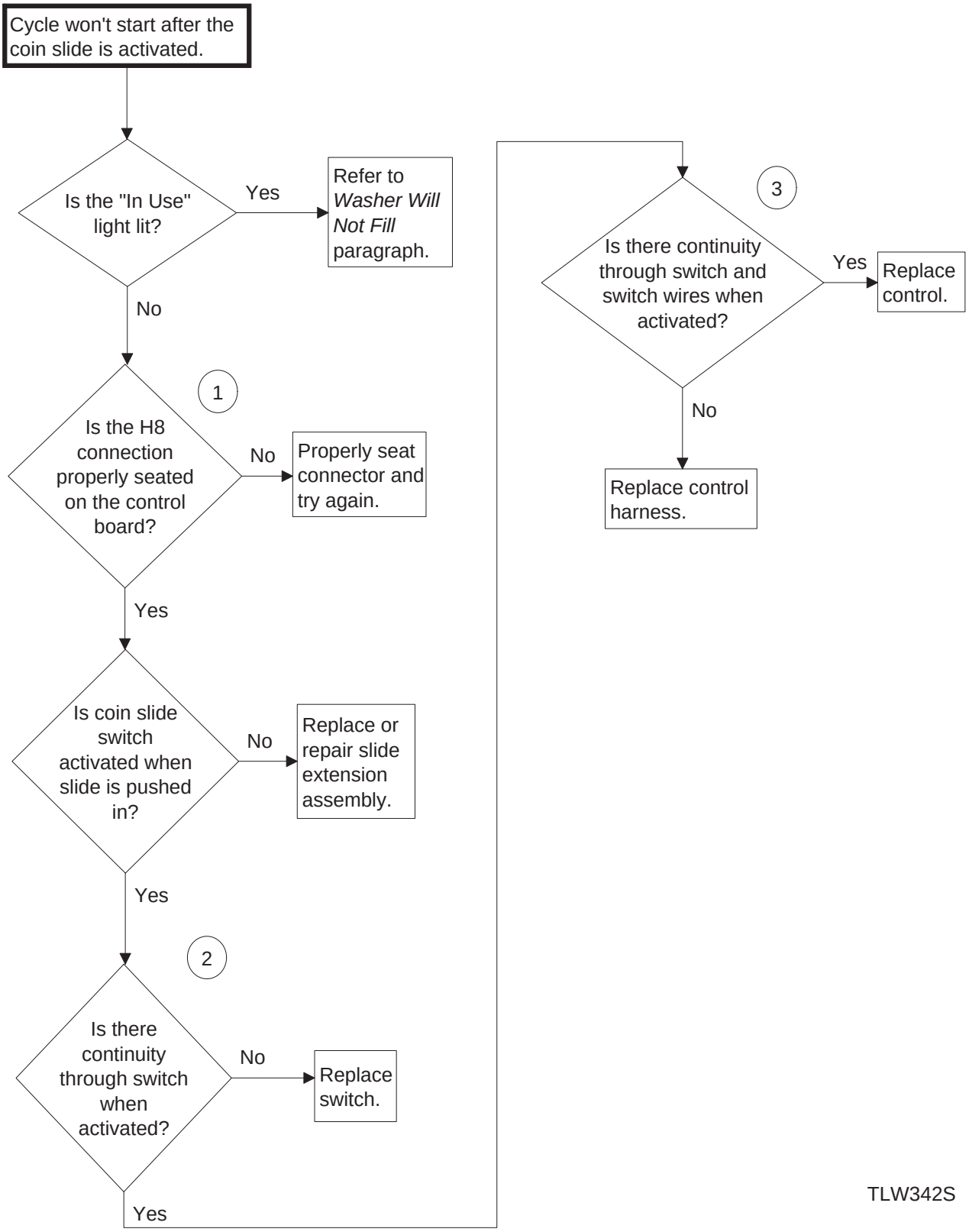

No Cycle Start When the Coin Slide is Activated

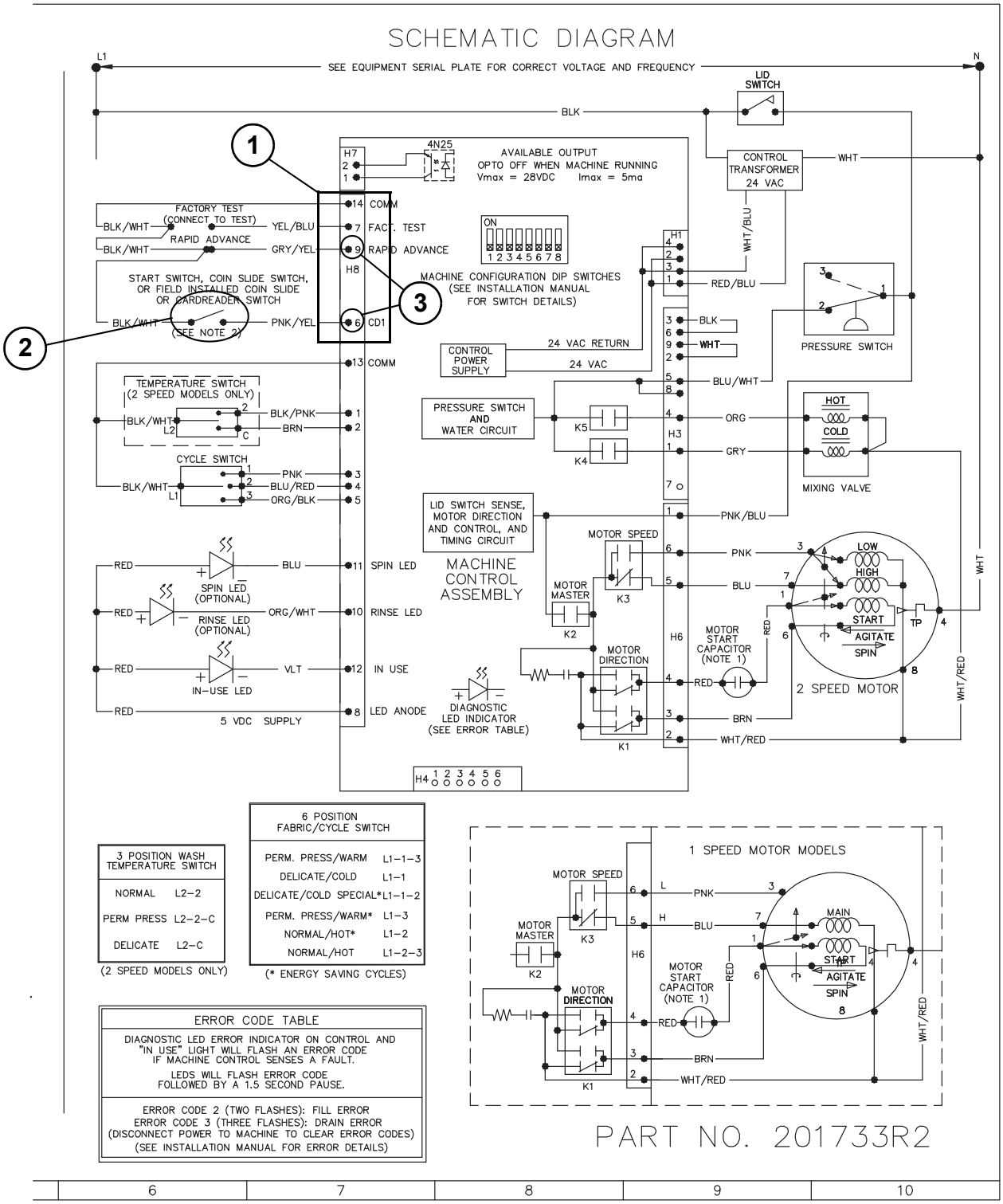

26. Washer Will Not Fill (Pressure Switch Diagnostic)

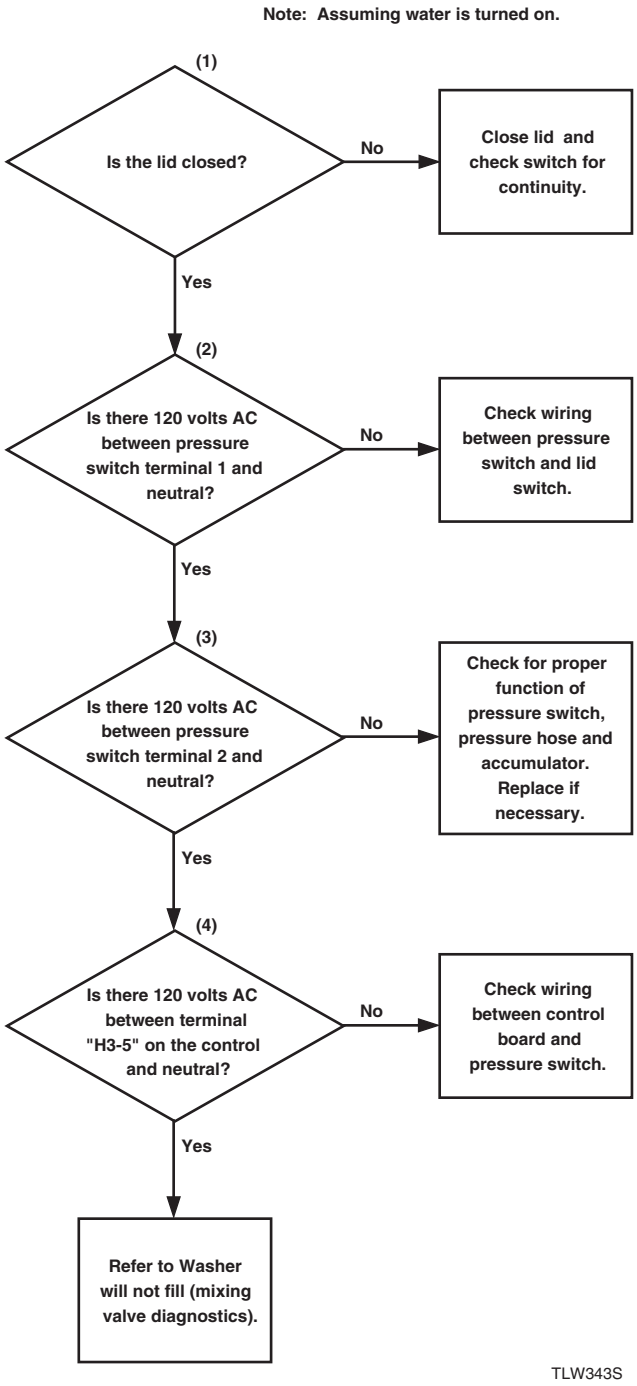

Washer Will Not Fill (Pressure Switch Diagnostic)

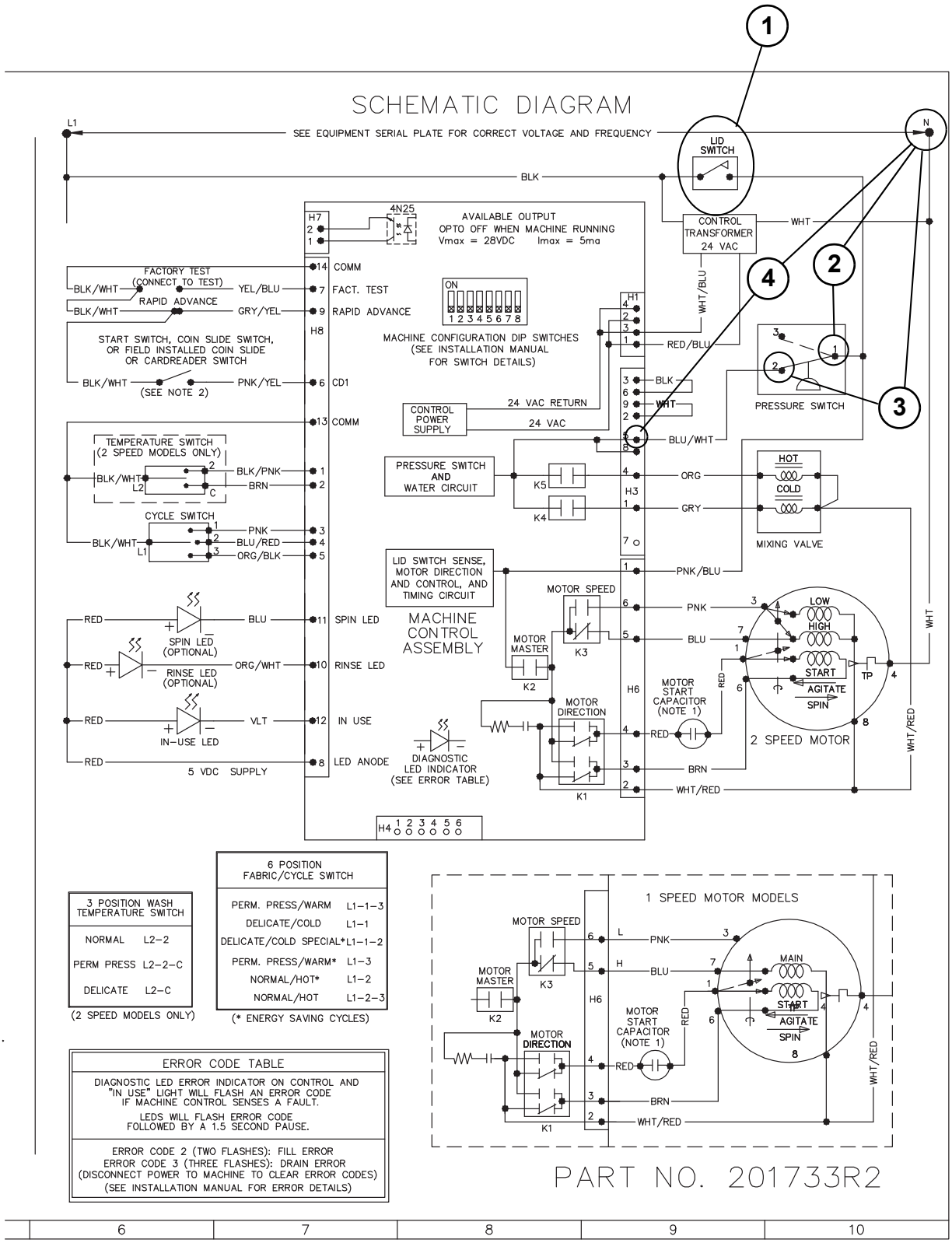

3 POSITION WASH TEMPERATURE SWITCH	
NORMAL	L2–2
PERM PRESS	L2–2–C
DELICATE	L2–C

(2 SPEED MODELS ONLY)

6 POSITION FABRIC/CYCLE SWITCH	
PERM. PRESS/WARM	L1–1–3
DELICATE/COLD	L1–1
DELICATE/COLD SPECIAL*	L1–1–2
PERM. PRESS/WARM*	L1–3
NORMAL/HOT*	L1–2
NORMAL/HOT	L1–2–3

(* ENERGY SAVING CYCLES)

ERROR CODE TABLE
DIAGNOSTIC LED ERROR INDICATOR ON CONTROL AND "IN USE" LIGHT WILL FLASH AN ERROR CODE IF MACHINE CONTROL SENSES A FAULT. LEDS WILL FLASH ERROR CODE FOLLOWED BY A 1.5 SECOND PAUSE.
ERROR CODE 2 (TWO FLASHES): FILL ERROR ERROR CODE 3 (THREE FLASHES): DRAIN ERROR (DISCONNECT POWER TO MACHINE TO CLEAR ERROR CODES) (SEE INSTALLATION MANUAL FOR ERROR DETAILS)

PART NO. 201733R2

27. Washer Will Not Fill (Mixing Valve Diagnostic)

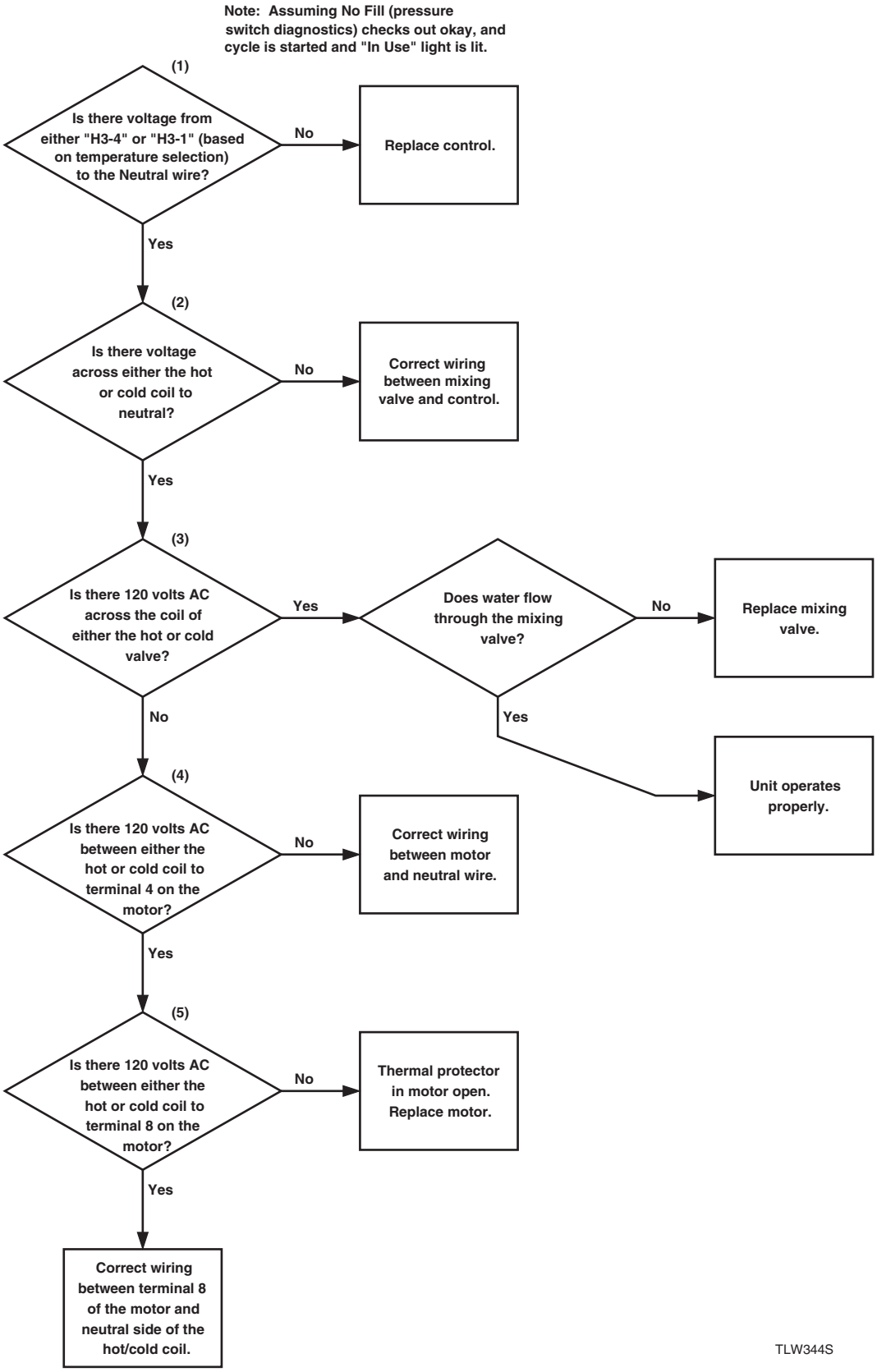

Washer Will Not Fill (Mixing Valve Diagnostic)

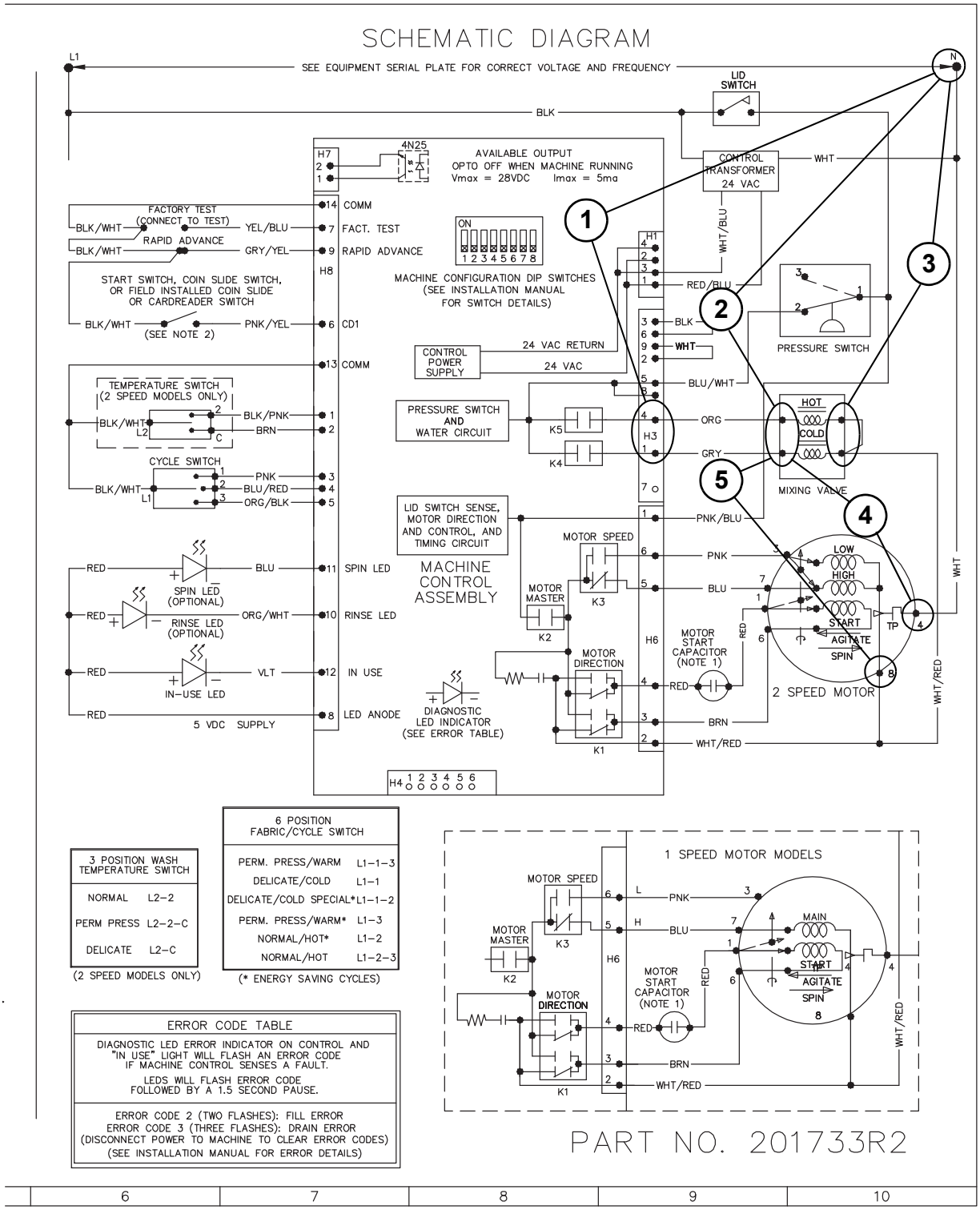

3 POSITION WASH TEMPERATURE SWITCH	
NORMAL	L2–2
PERM PRESS	L2–2–C
DELICATE	L2–C

(2 SPEED MODELS ONLY)

6 POSITION FABRIC/CYCLE SWITCH	
PERM. PRESS/WARM	L1–1–3
DELICATE/COLD	L1–1
DELICATE/COLD SPECIAL*	L1–1–2
PERM. PRESS/WARM*	L1–3
NORMAL/HOT*	L1–2
NORMAL/HOT	L1–2–3

(* ENERGY SAVING CYCLES)

ERROR CODE TABLE
DIAGNOSTIC LED ERROR INDICATOR ON CONTROL AND "IN USE" LIGHT WILL FLASH AN ERROR CODE IF MACHINE CONTROL SENSES A FAULT. LEDS WILL FLASH ERROR CODE FOLLOWED BY A 1.5 SECOND PAUSE.
ERROR CODE 2 (TWO FLASHES): FILL ERROR ERROR CODE 3 (THREE FLASHES): DRAIN ERROR (DISCONNECT POWER TO MACHINE TO CLEAR ERROR CODES) (SEE INSTALLATION MANUAL FOR ERROR DETAILS)

PART NO. 201733R2

28. Washer Over Fills (Pressure Switch Open)

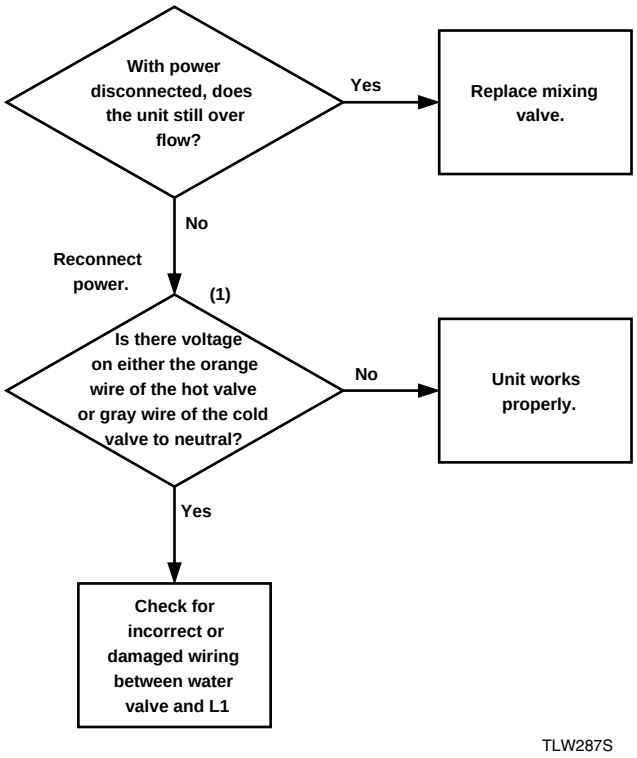

Washer Over Fills (Pressure Switch Open)

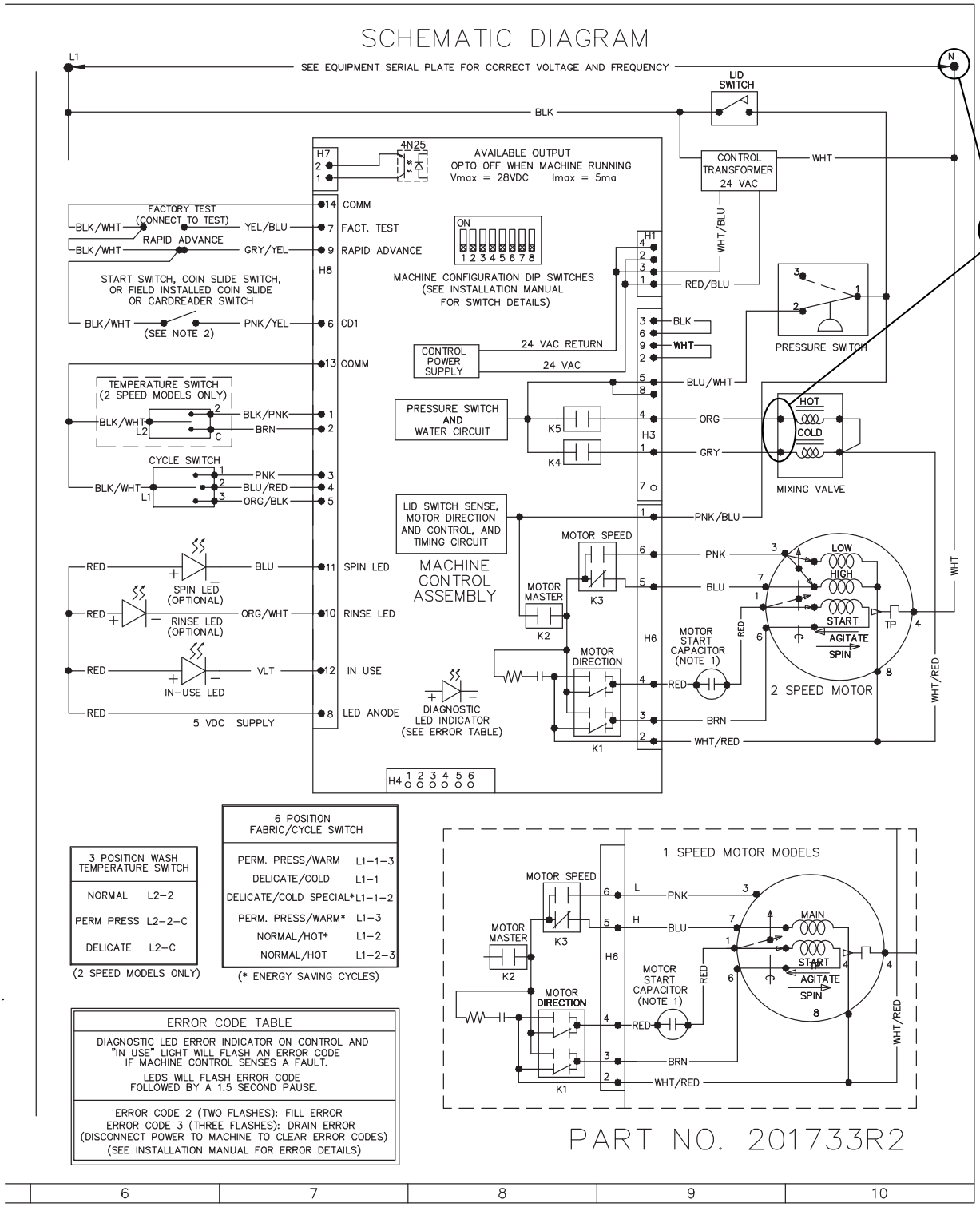

3 POSITION WASH TEMPERATURE SWITCH	
NORMAL	L2–2
PERM PRESS	L2–2–C
DELICATE	L2–C

(2 SPEED MODELS ONLY)

6 POSITION FABRIC/CYCLE SWITCH	
PERM. PRESS/WARM	L1–1–3
DELICATE/COLD	L1–1
DELICATE/COLD SPECIAL*	L1–1–2
PERM. PRESS/WARM*	L1–3
NORMAL/HOT*	L1–2
NORMAL/HOT	L1–2–3

(* ENERGY SAVING CYCLES)

ERROR CODE TABLE
DIAGNOSTIC LED ERROR INDICATOR ON CONTROL AND "IN USE" LIGHT WILL FLASH AN ERROR CODE IF MACHINE CONTROL SENSES A FAULT. LEDS WILL FLASH ERROR CODE FOLLOWED BY A 1.5 SECOND PAUSE.
ERROR CODE 2 (TWO FLASHES): FILL ERROR ERROR CODE 3 (THREE FLASHES): DRAIN ERROR (DISCONNECT POWER TO MACHINE TO CLEAR ERROR CODES) (SEE INSTALLATION MANUAL FOR ERROR DETAILS)

29. No Agitation – Low and High Speed

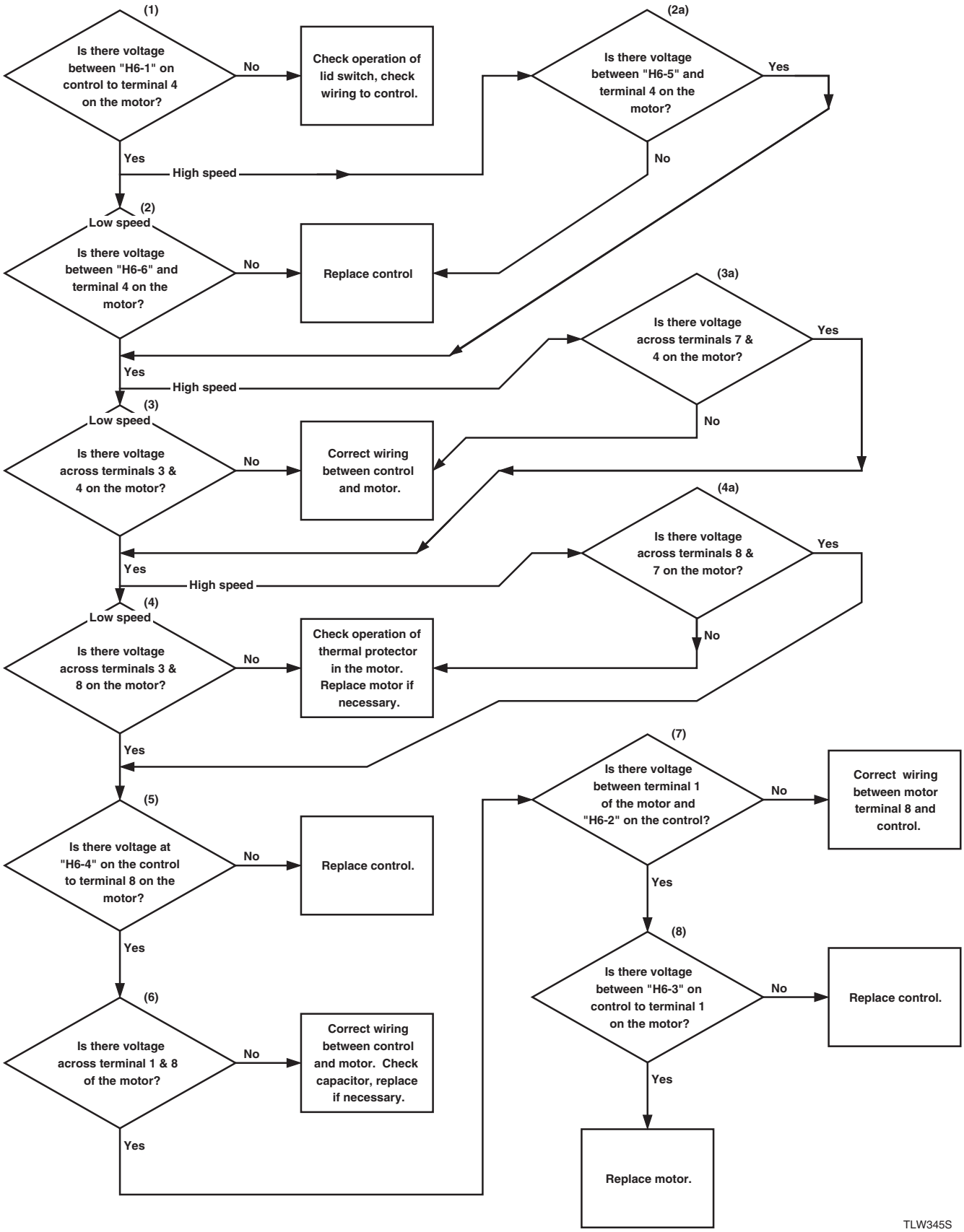

No Agitation – Low and High Speed

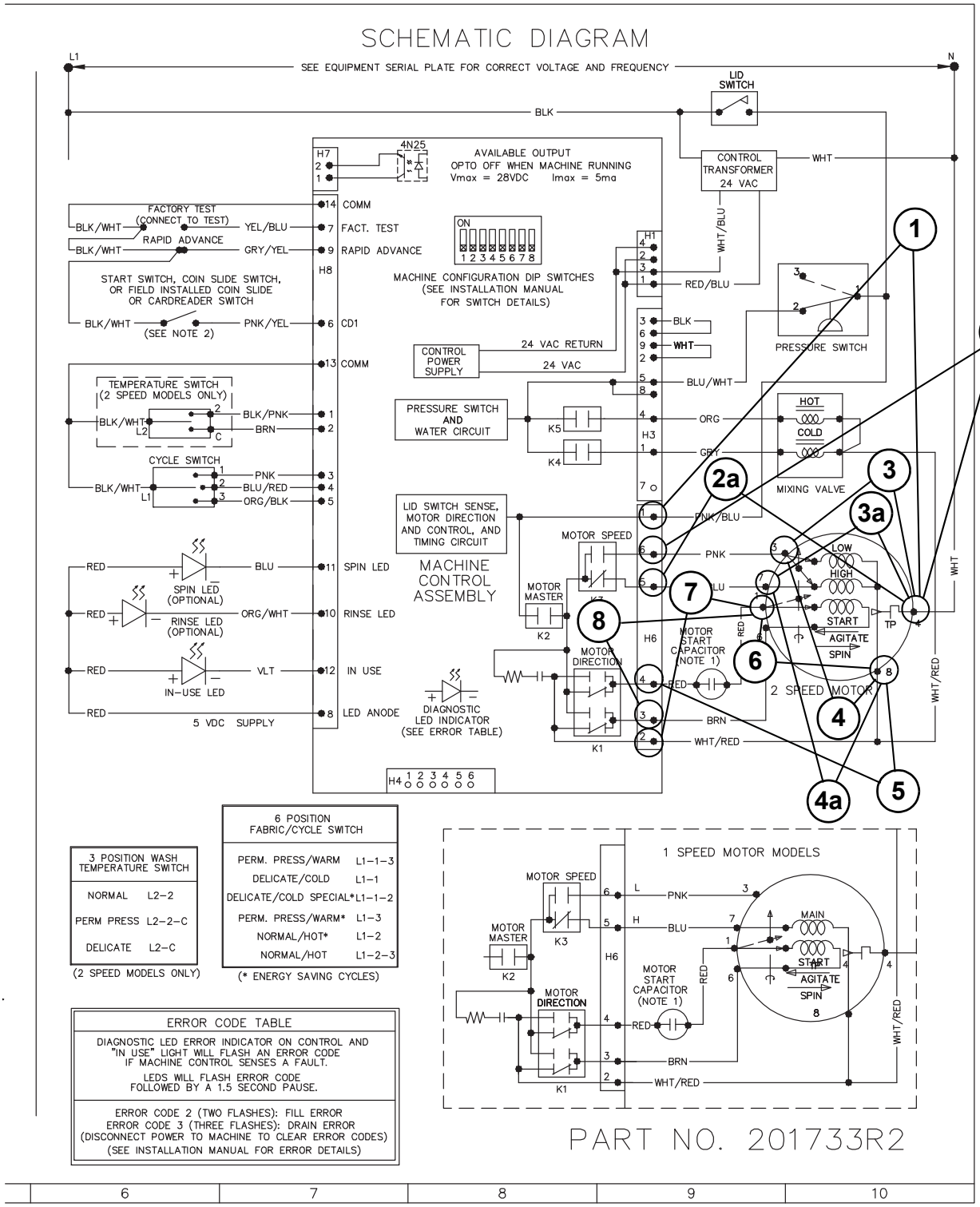

3 POSITION WASH TEMPERATURE SWITCH	
NORMAL	L2–2
PERM PRESS	L2–2–C
DELICATE	L2–C

(2 SPEED MODELS ONLY)

6 POSITION FABRIC/CYCLE SWITCH	
PERM. PRESS/WARM	L1–1–3
DELICATE/COLD	L1–1
DELICATE/COLD SPECIAL*	L1–1–2
PERM. PRESS/WARM*	L1–3
NORMAL/HOT*	L1–2
NORMAL/HOT	L1–2–3

(* ENERGY SAVING CYCLES)

ERROR CODE TABLE
DIAGNOSTIC LED ERROR INDICATOR ON CONTROL AND "IN USE" LIGHT WILL FLASH AN ERROR CODE IF MACHINE CONTROL SENSES A FAULT. LEDS WILL FLASH ERROR CODE FOLLOWED BY A 1.5 SECOND PAUSE.
ERROR CODE 2 (TWO FLASHES): FILL ERROR ERROR CODE 3 (THREE FLASHES): DRAIN ERROR (DISCONNECT POWER TO MACHINE TO CLEAR ERROR CODES) (SEE INSTALLATION MANUAL FOR ERROR DETAILS)

30. Washer Will Not Spin – Low Speed

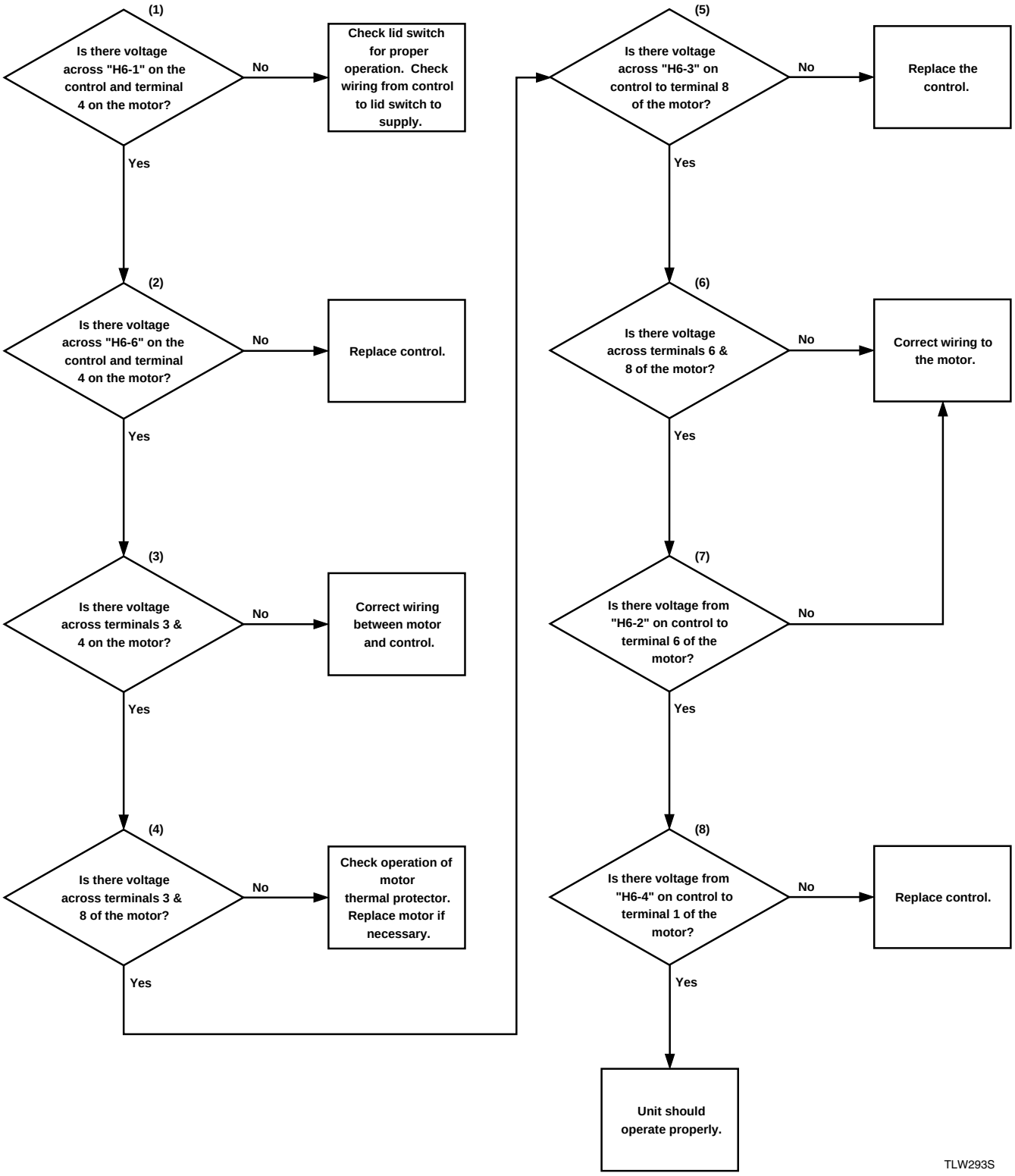

Washer Will Not Spin – Low Speed

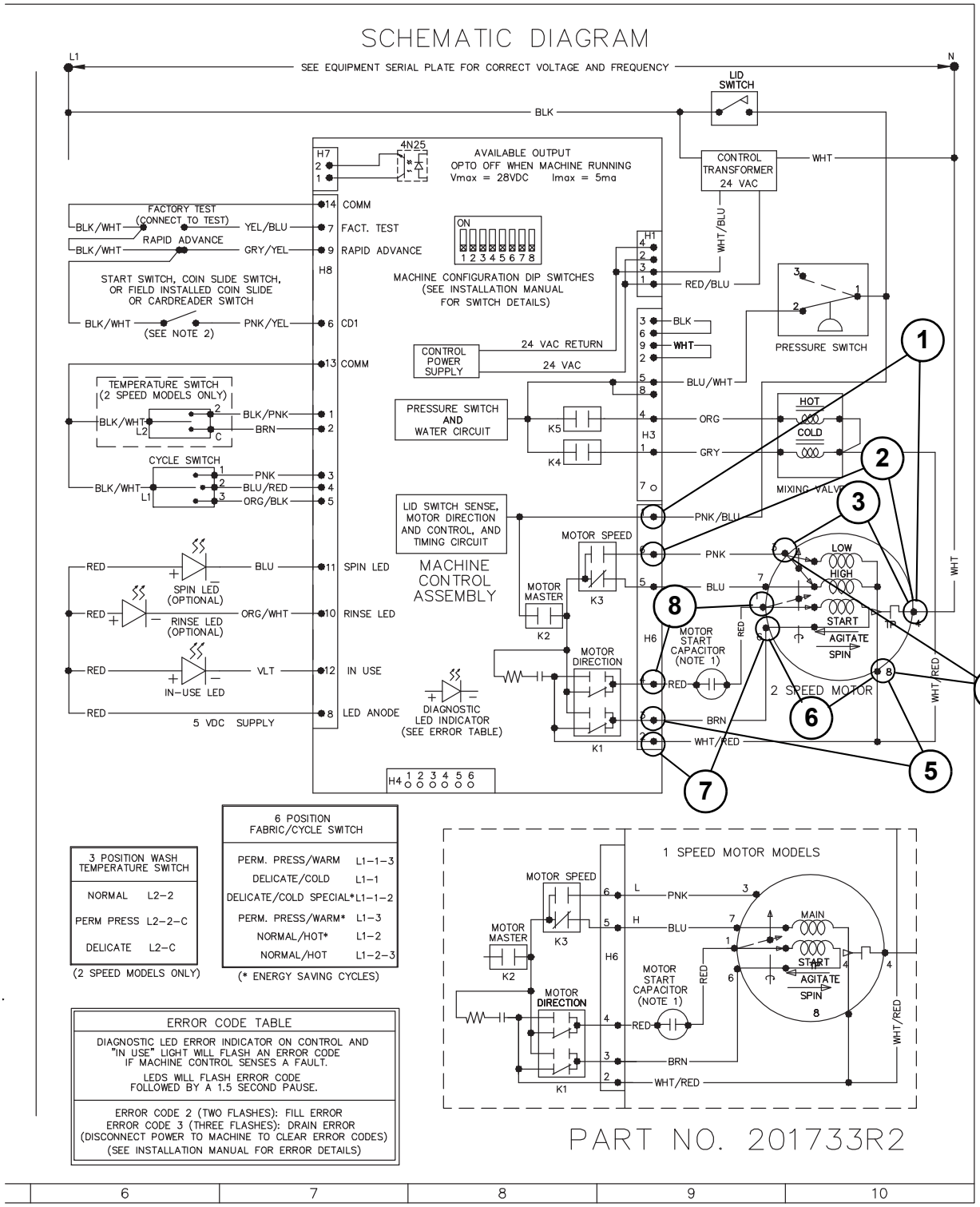

3 POSITION WASH TEMPERATURE SWITCH	
NORMAL	L2–2
PERM PRESS	L2–2–C
DELICATE	L2–C

(2 SPEED MODELS ONLY)

6 POSITION FABRIC/CYCLE SWITCH	
PERM. PRESS/WARM	L1–1–3
DELICATE/COLD	L1–1
DELICATE/COLD SPECIAL*	L1–1–2
PERM. PRESS/WARM*	L1–3
NORMAL/HOT*	L1–2
NORMAL/HOT	L1–2–3

(* ENERGY SAVING CYCLES)

ERROR CODE TABLE
DIAGNOSTIC LED ERROR INDICATOR ON CONTROL AND "IN USE" LIGHT WILL FLASH AN ERROR CODE IF MACHINE CONTROL SENSES A FAULT. LEDS WILL FLASH ERROR CODE FOLLOWED BY A 1.5 SECOND PAUSE.
ERROR CODE 2 (TWO FLASHES): FILL ERROR ERROR CODE 3 (THREE FLASHES): DRAIN ERROR (DISCONNECT POWER TO MACHINE TO CLEAR ERROR CODES) (SEE INSTALLATION MANUAL FOR ERROR DETAILS)

31. Washer Will Not Spin – High Speed

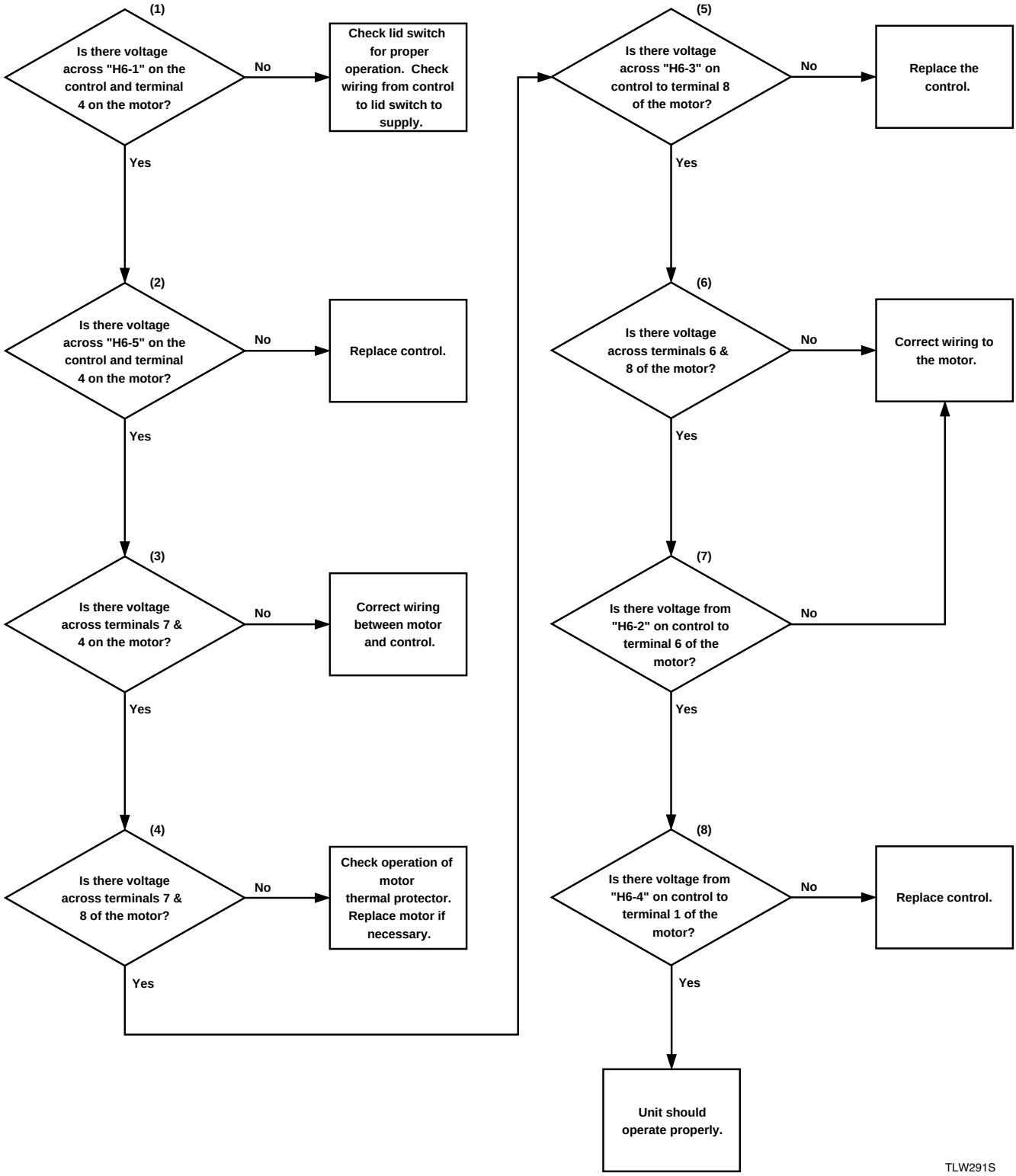

Washer Will Not Spin – High Speed

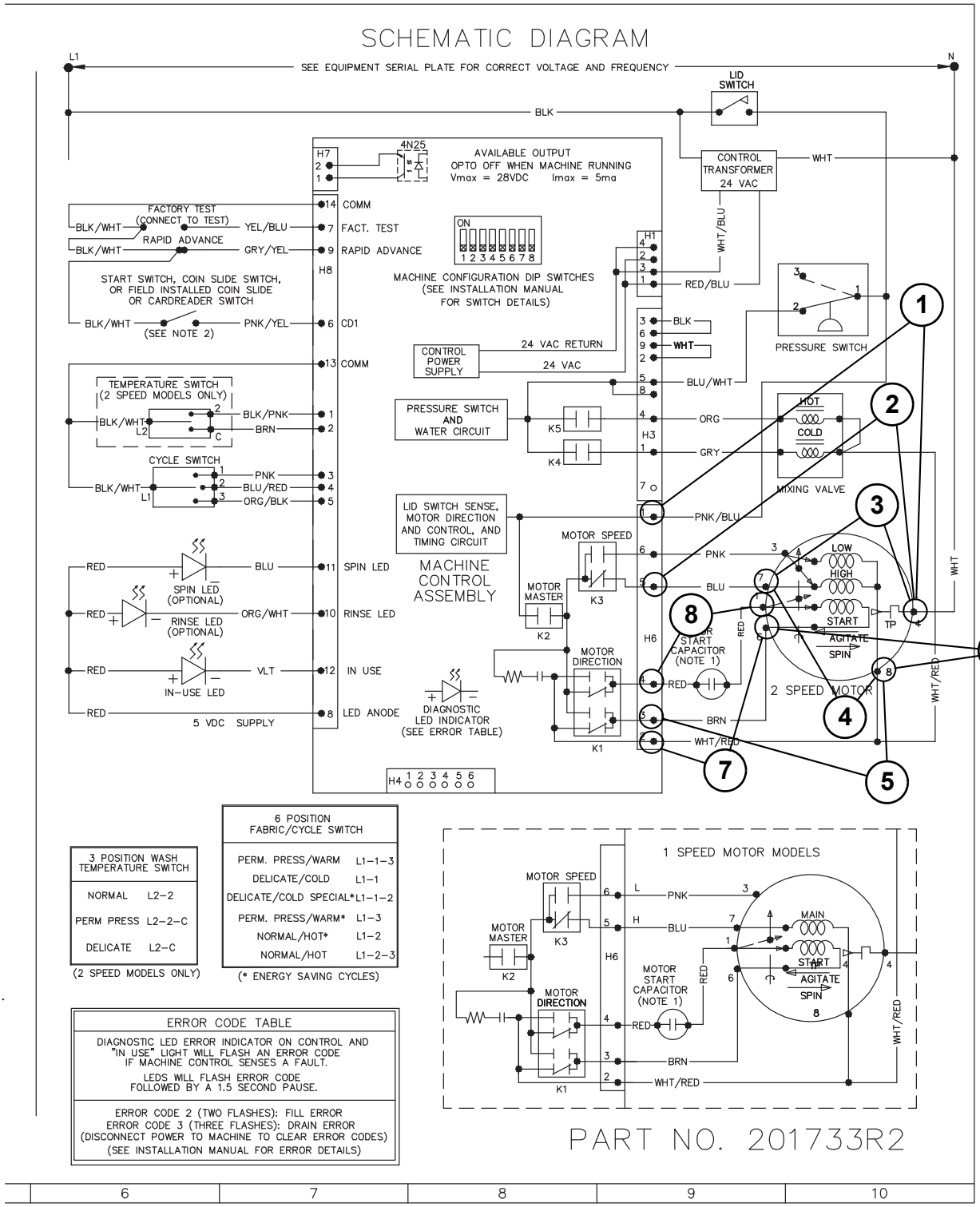

Notes

Troubleshooting

EDC Models

WARNING

To reduce the risk of electric shock, fire, explosion, serious injury or death:
- **Disconnect electric power to the washer before servicing.**
- **Never start the washer with any guards/panels removed.**
- **Whenever ground wires are removed during servicing, these ground wires must be reconnected to ensure that the washer is properly grounded.**

W003

32. EDC Error Code Listing

E:00	General Error	
E:01	Proximity Error	Micro-wand IIIe is improperly aimed at infrared communicator (angle or distance): Re-aim Micro-wand IIIe.
E:02	IR Communications Disconnection	Micro-wand IIIe prematurely pulled away from electronic control during infrared communication: Maintain infrared connection between Micro-wand IIIe and electronic control during communication.
E:05	Invalid Value Communication	Invalid code downloaded from Micro-wand IIIe to electronic control.
E:07	Inoperative Control	Replace electronic control.
E:08	Inoperative Control	Replace electronic control.
E:09	Proximity Error	Micro-wand IIIe is improperly aimed at infrared communicator (angle or distance): Re-aim Micro-wand IIIe.
E:0A	Proximity Error	Micro-wand IIIe is improperly aimed at infrared communicator (angle or distance): Re-aim Micro-wand IIIe.
E:0B	IR Communication Disconnection	Micro-wand IIIe prematurely pulled away from electronic control during infrared communication: Maintain infrared connection between Micro-wand IIIe and electronic control during communication.
E:0C	IR Communication Disconnection	Micro-wand IIIe prematurely pulled away from electronic control during infrared communication: Maintain infrared connection between Micro-wand IIIe and electronic control during communication.
E:0d	Pressure Switch Error	1. Check fill and drain hoses for improper installation and kinks. 2. Check fill electrical circuit: Replace inoperative switches or wires.
E:0F	IR Communicator Programmed Off	Reprogram infrared communicator on.
Err	Coin Error	1. Inoperative coin sensor: Run the Coin Drop Diagnostic test. 2. Coin drop obstruction: Check coin drop area and remove any obstructions. 3. Customer tampering: Evaluate security procedures.

NOTE: Disconnecting power to the unit may clear the error display.

NOTE: If replacing an inoperative electronic control due to burnt pin(s) on the 6-pin wire harness connector block, it may be due to damaged terminals in the harness connector. Damaged terminals in the harness connector will appear burnt or show signs of heat discoloration on the connector block. Replace the control wire harness with the control to avoid repeated damage.

33. Cannot Perform Infrared Communication

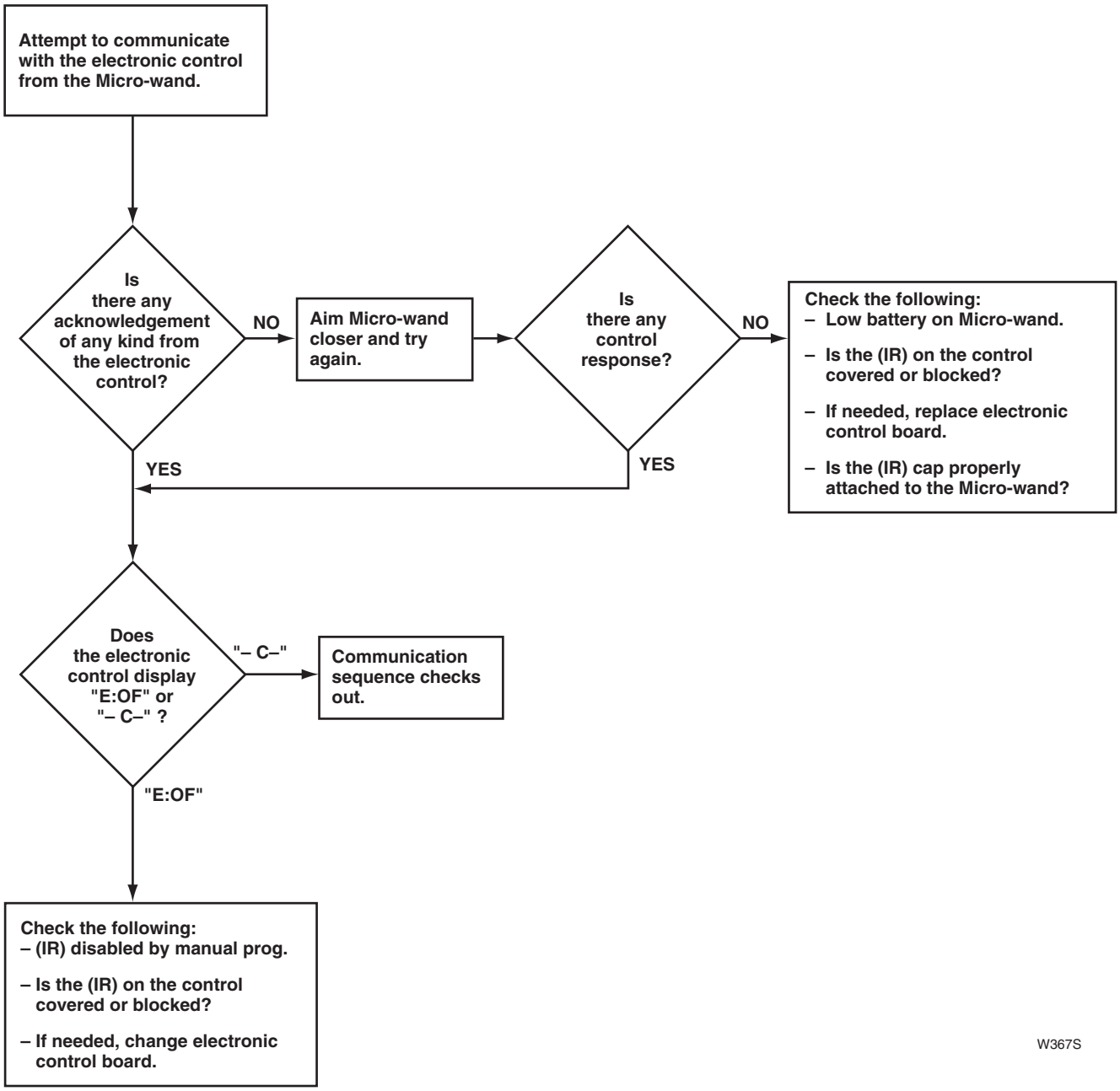

34. Coins Ignored When Entered

NOTE: For instructions on performing tests, refer to programming manual.

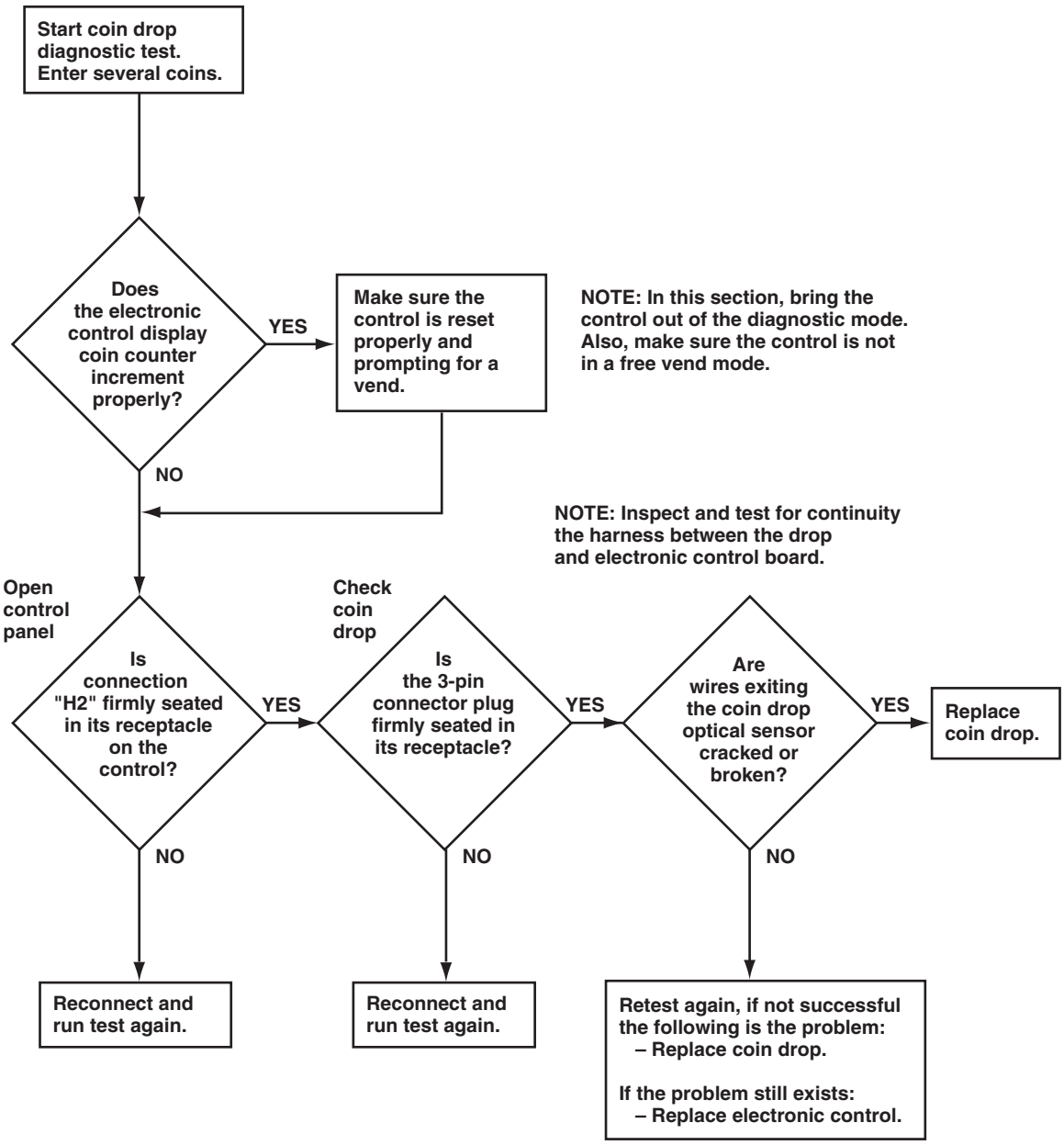

W368S

35. Electronic Control Has No Visible Display

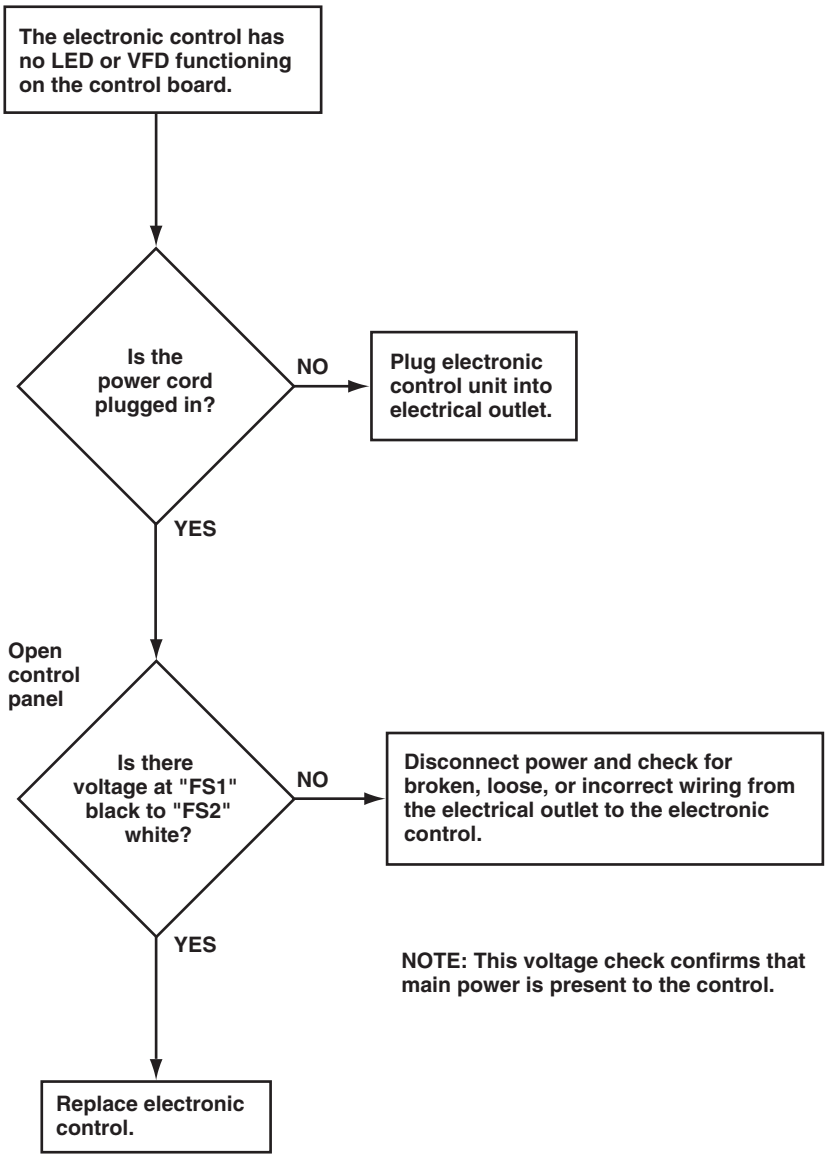

W369S

36. No Fill Analysis

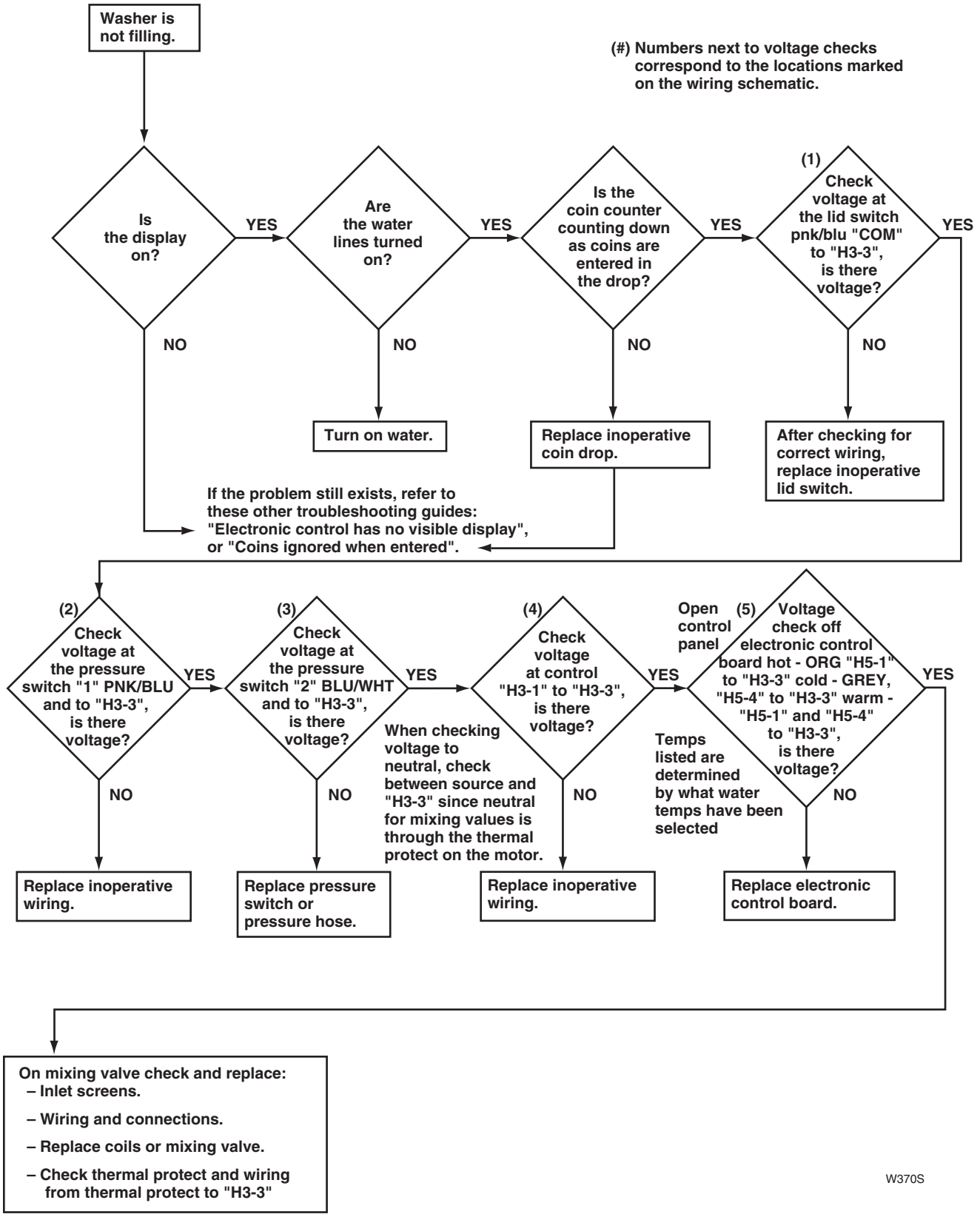

No Fill Analysis

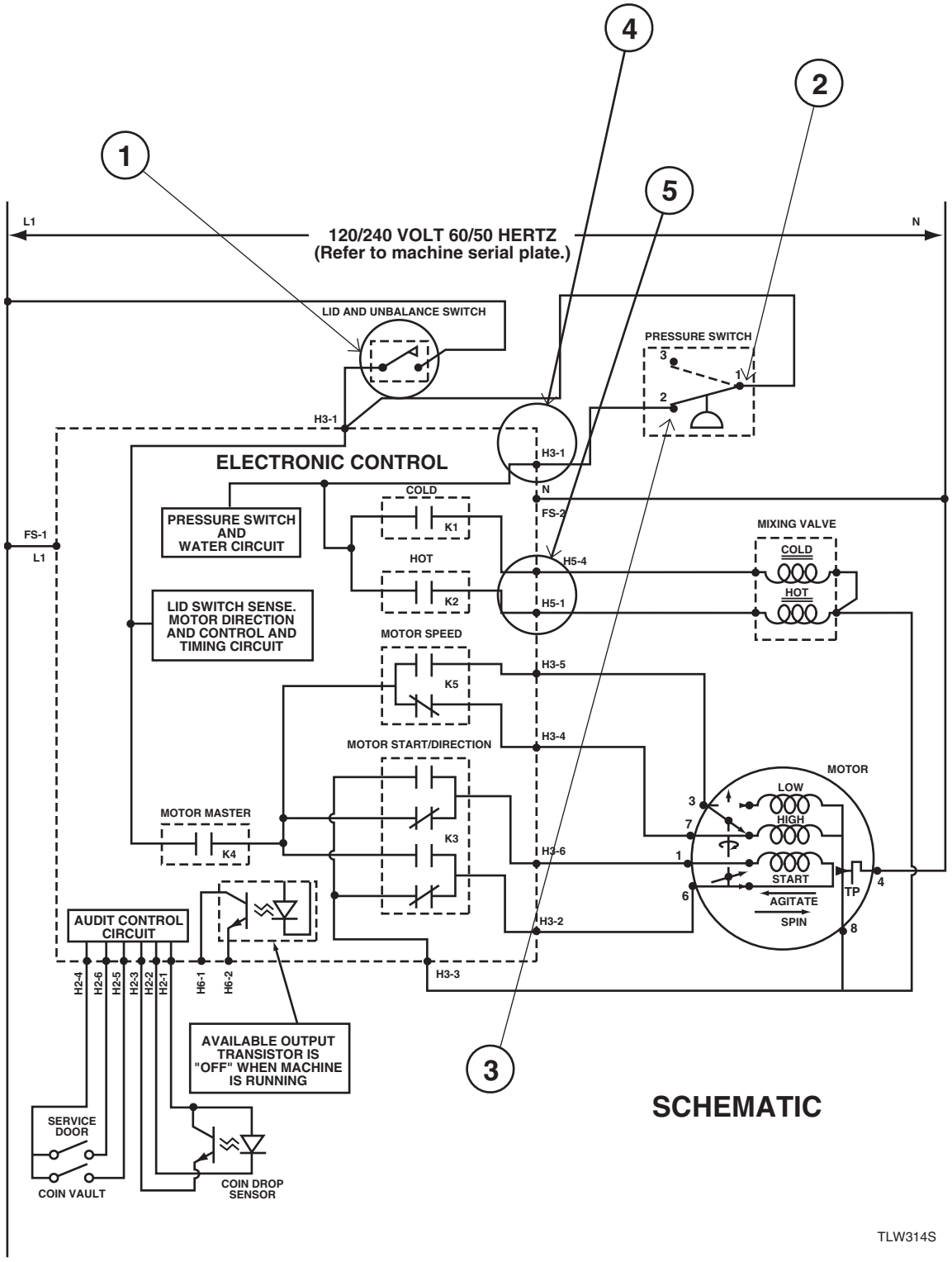

37. No Motor Run — Agitate Analysis

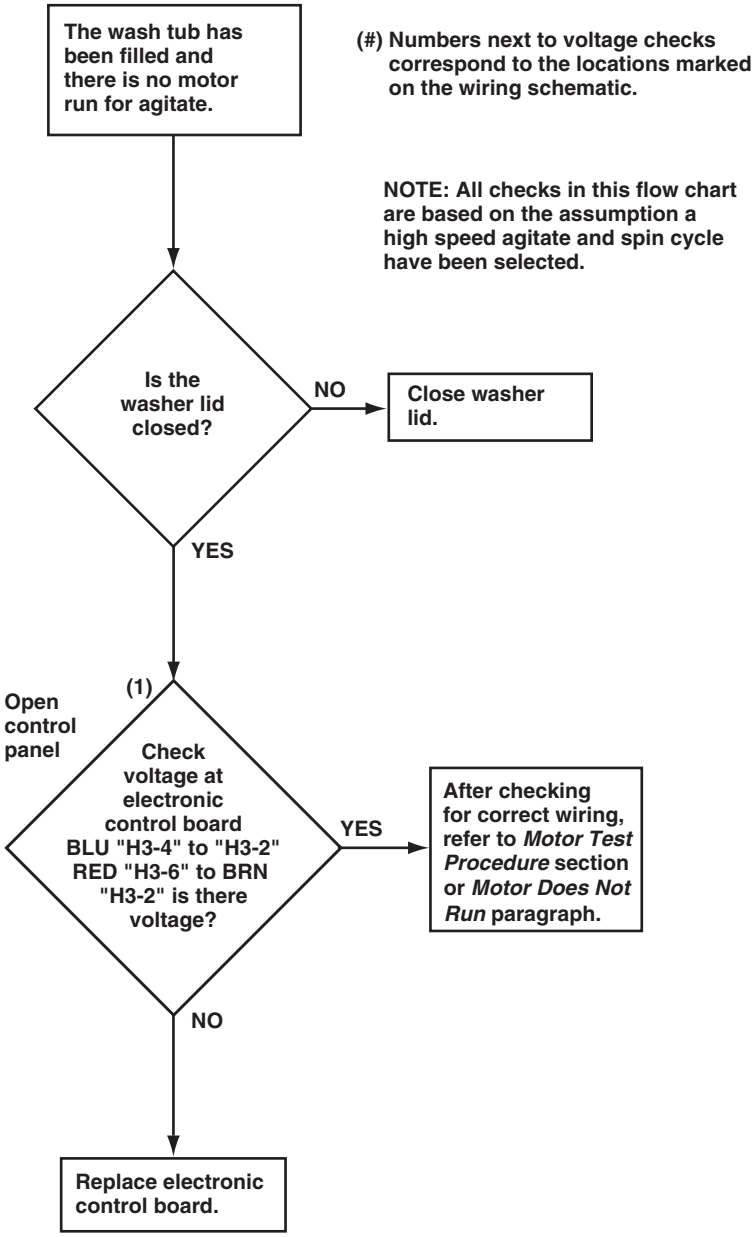

TLW374S

No Motor Run — Agitate Analysis

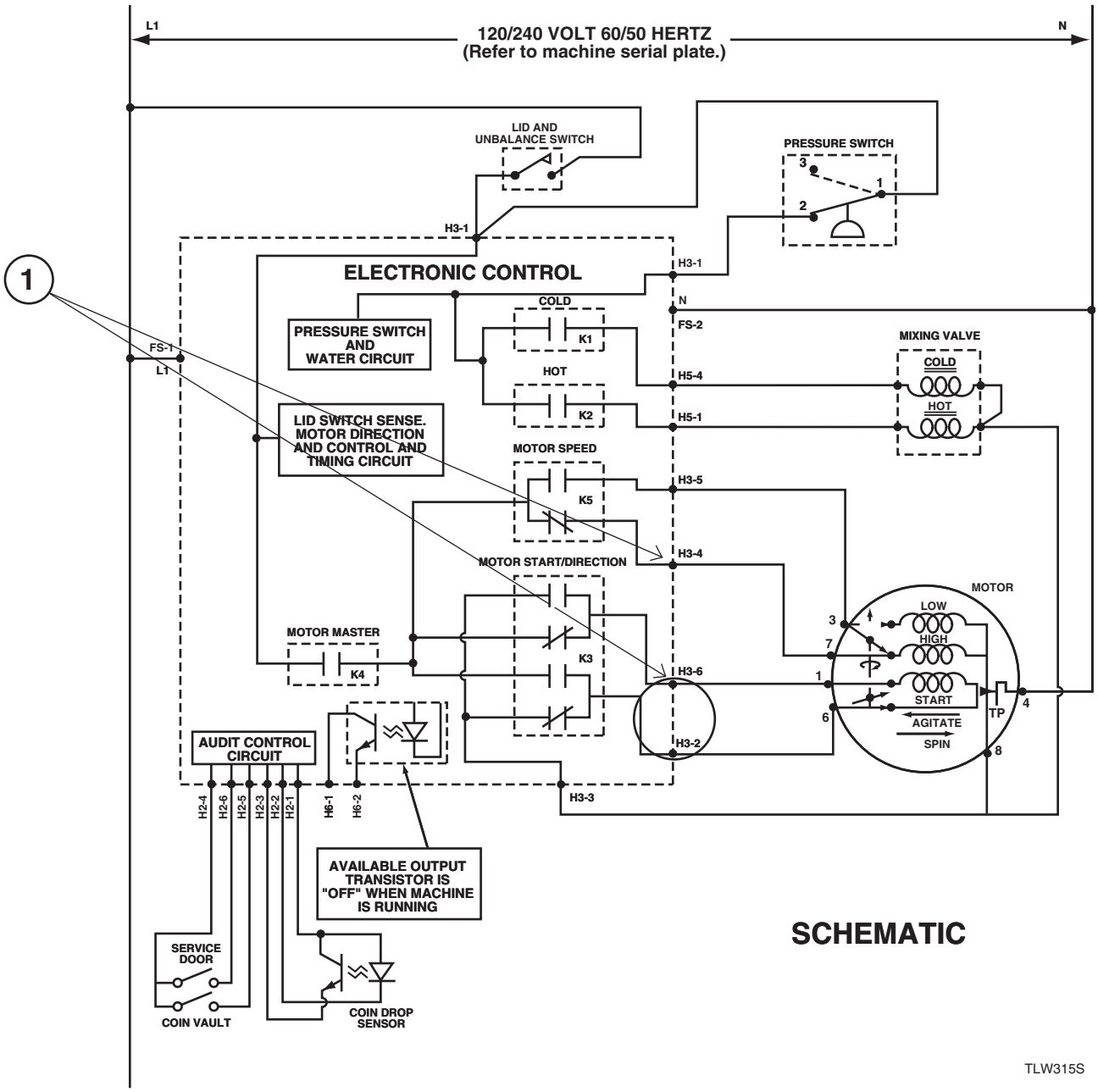

38. No Motor Run — Spin Analysis

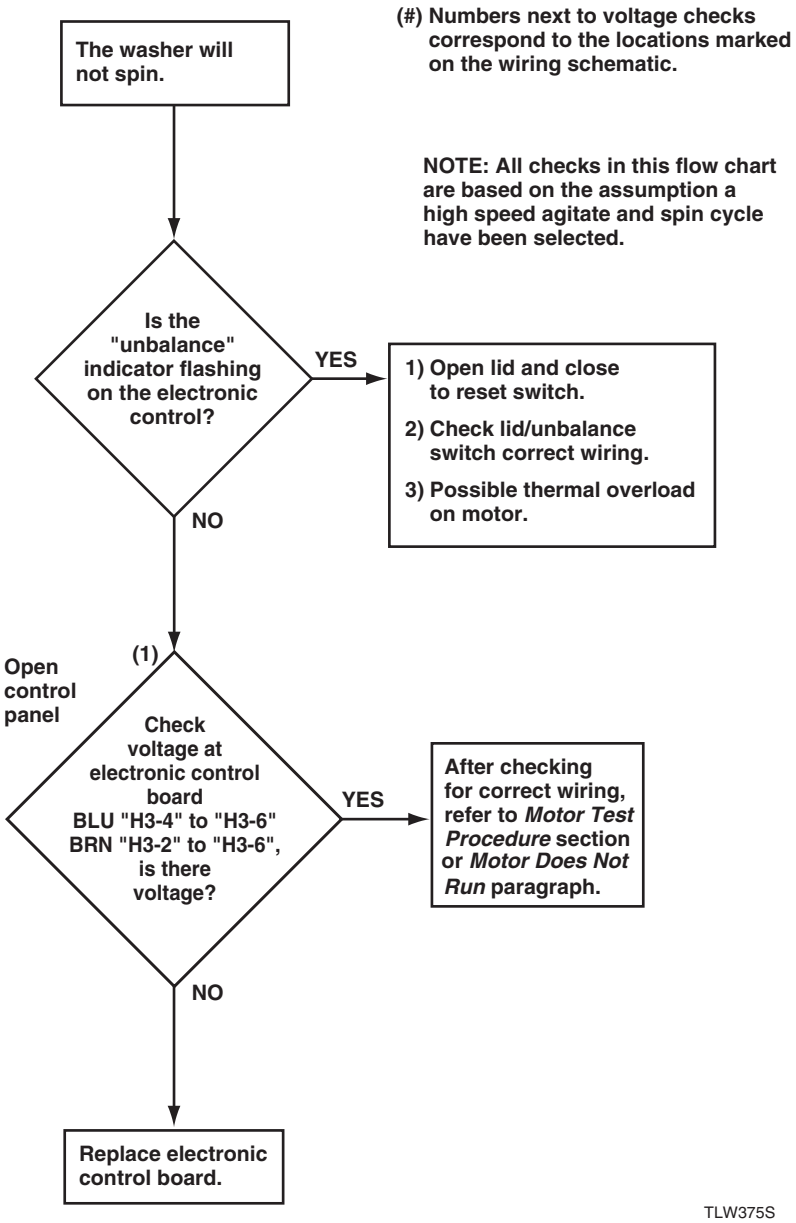

No Motor Run — Spin Analysis

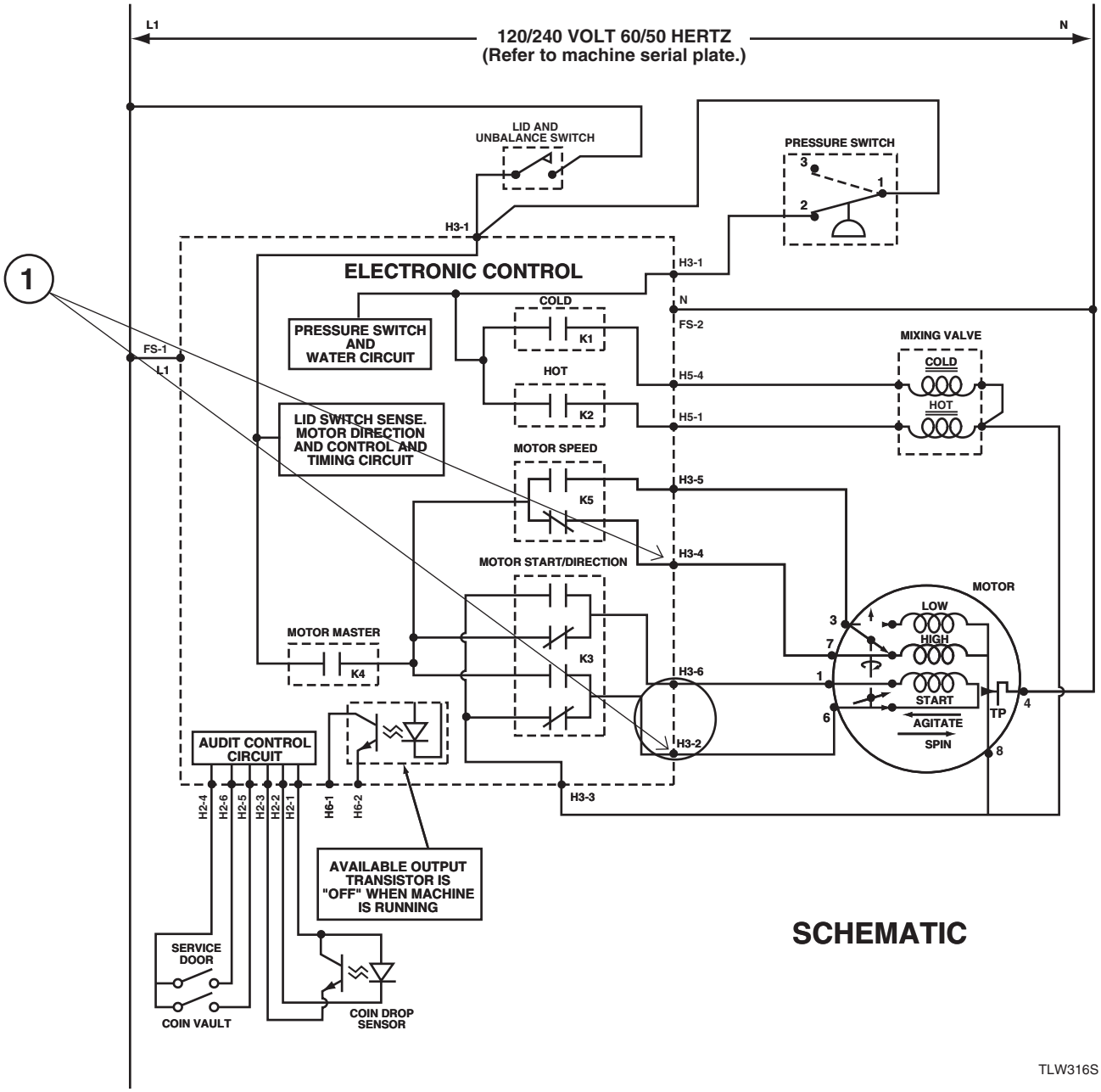

39. Overflow Analysis

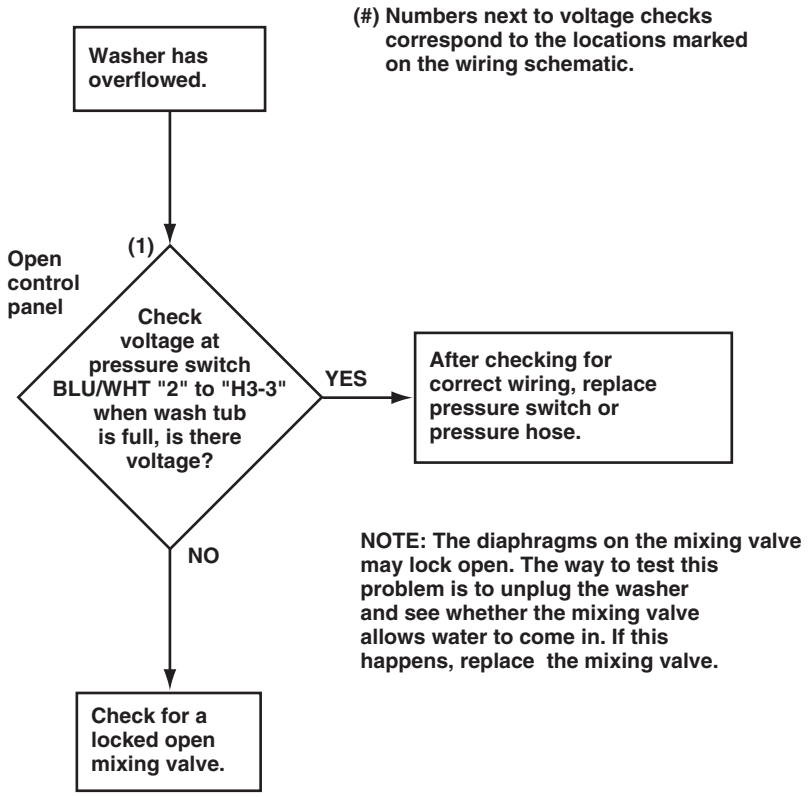

Overflow Analysis

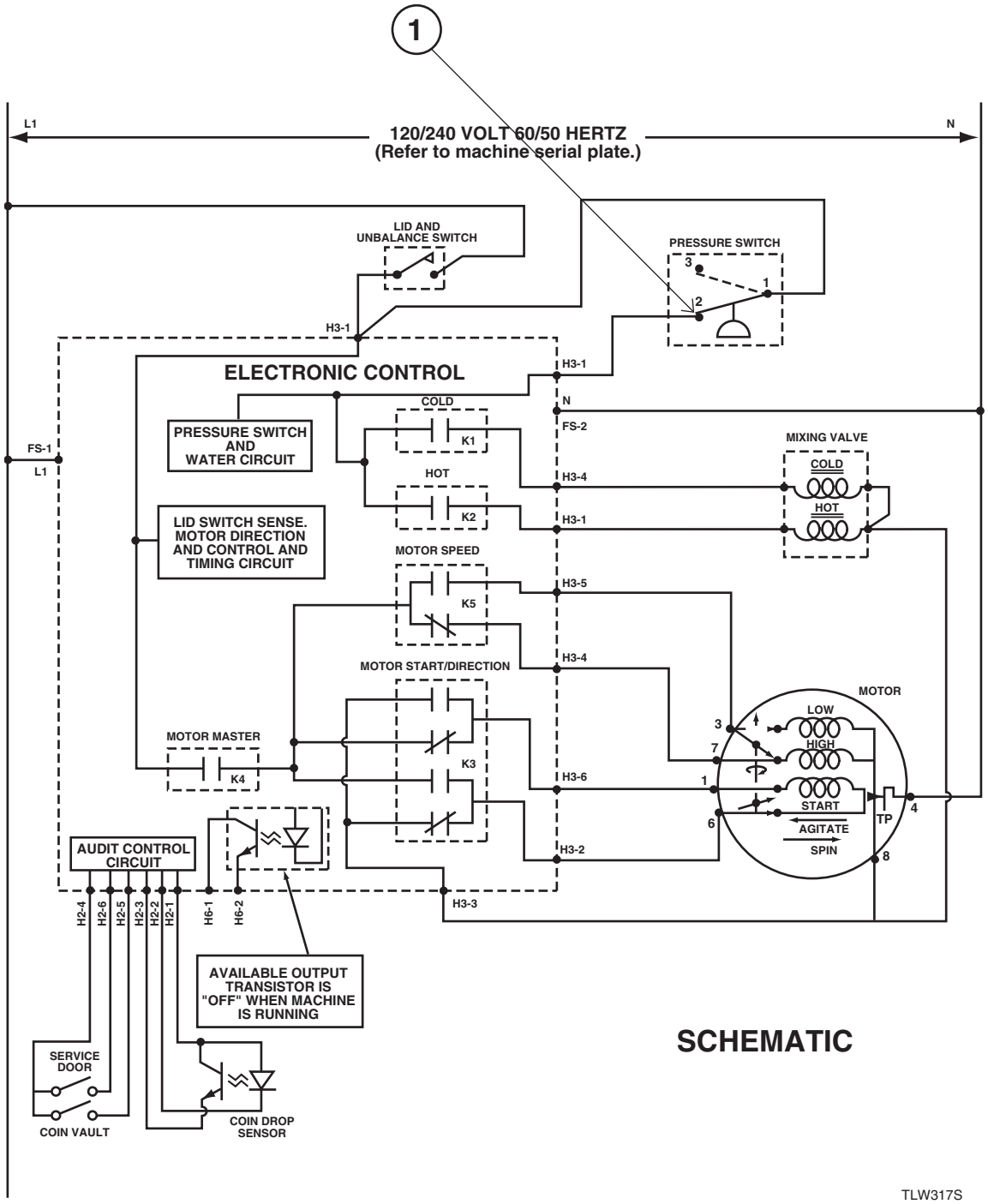

40. Audit Switch Function Analysis

NOTE: For instructions on performing tests, refer to programming manual.

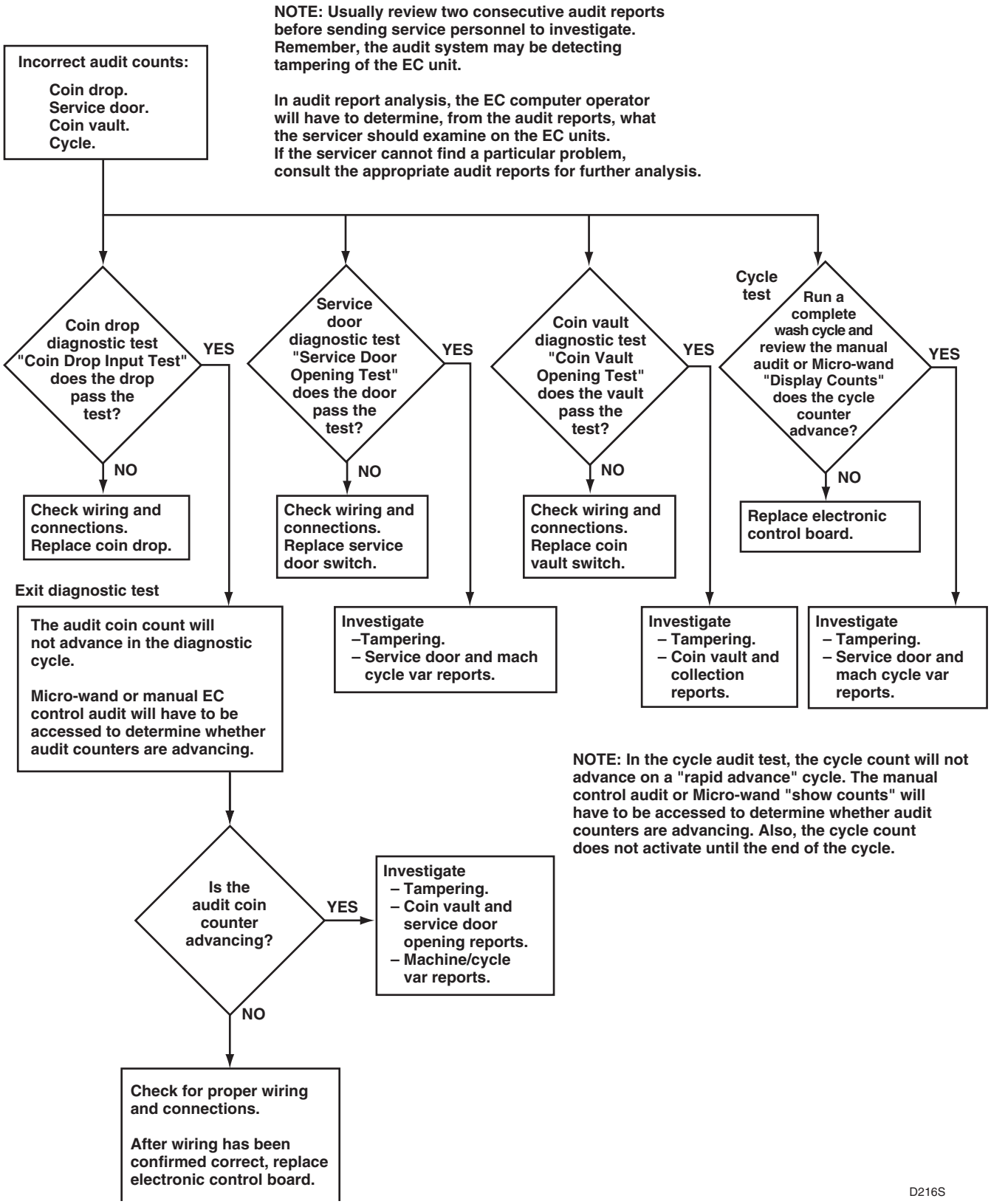

Troubleshooting

MDC Models

WARNING

To reduce the risk of electric shock, fire, explosion, serious injury or death:
- **Disconnect electric power to the washer before servicing.**
- **Never start the washer with any guards/panels removed.**
- **Whenever ground wires are removed during servicing, these ground wires must be reconnected to ensure that the washer is properly grounded.**

W003

41. MDC Error Code Listing

E:dr	Maximum drain time exceeded or water sensed at the end of a spin step.
E:FL	Maximum fill time exceeded.
Card Reader Machines: (In addition to the above errors)	
EC:19	Indicates no card reader communication. The control and the card reader cannot communicate. Check card reader, control and harness.

NOTE: For all other card reader errors, consult the card reader manufacturer.

42. No Visible Display on Control

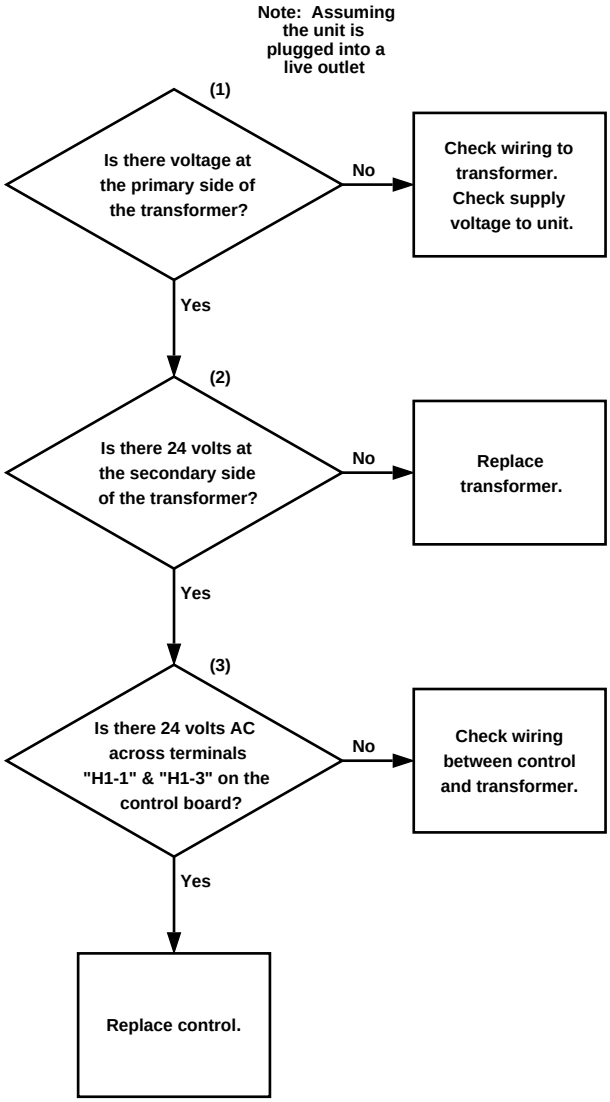

TLW279S

No Visible Display on Control

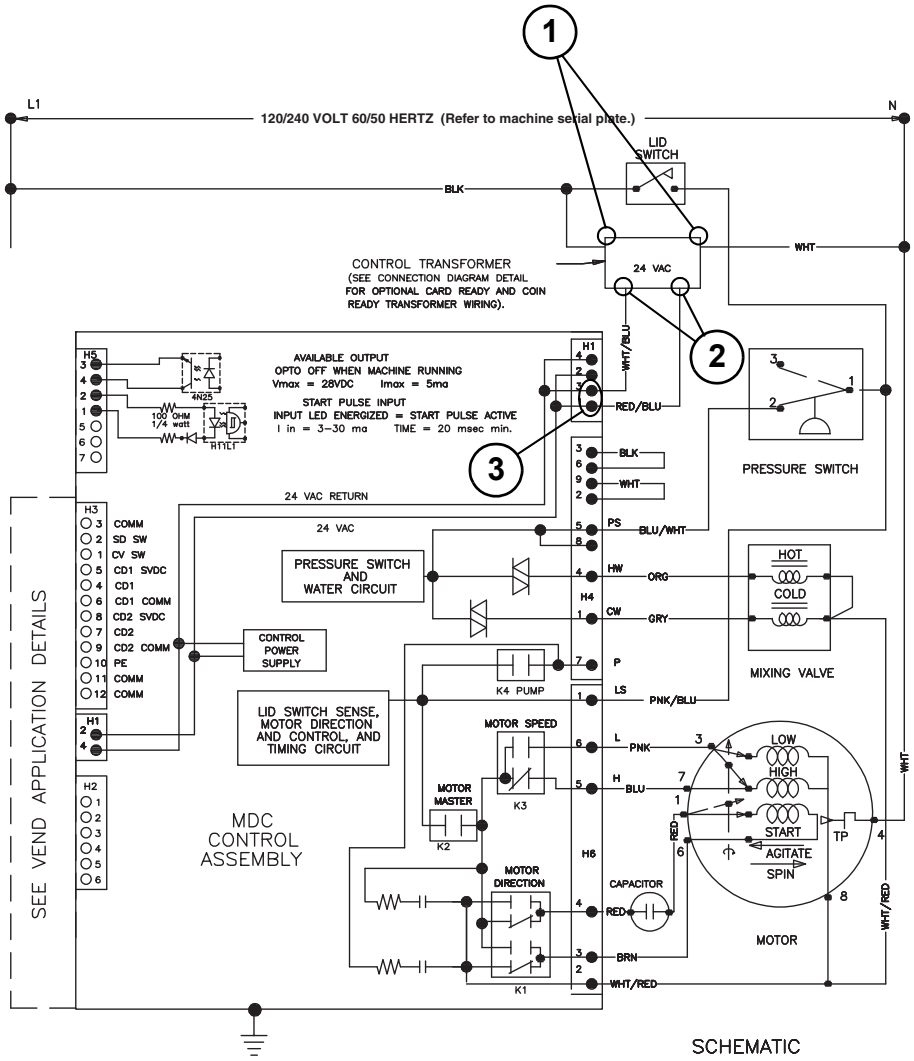

VEND APPLICATIONS DETAILS

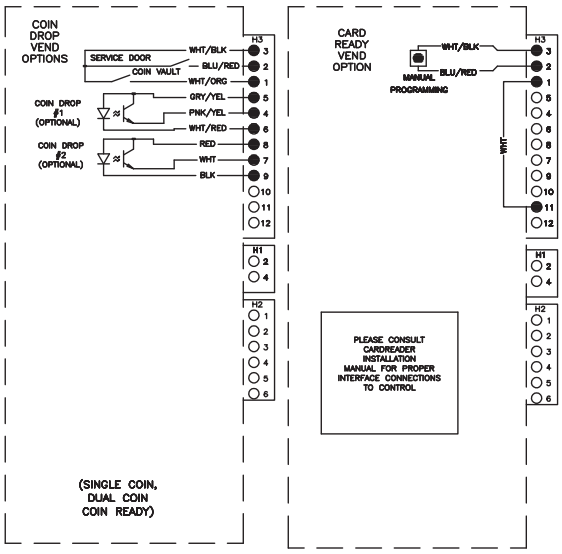

43. Coins Ignored When Entered

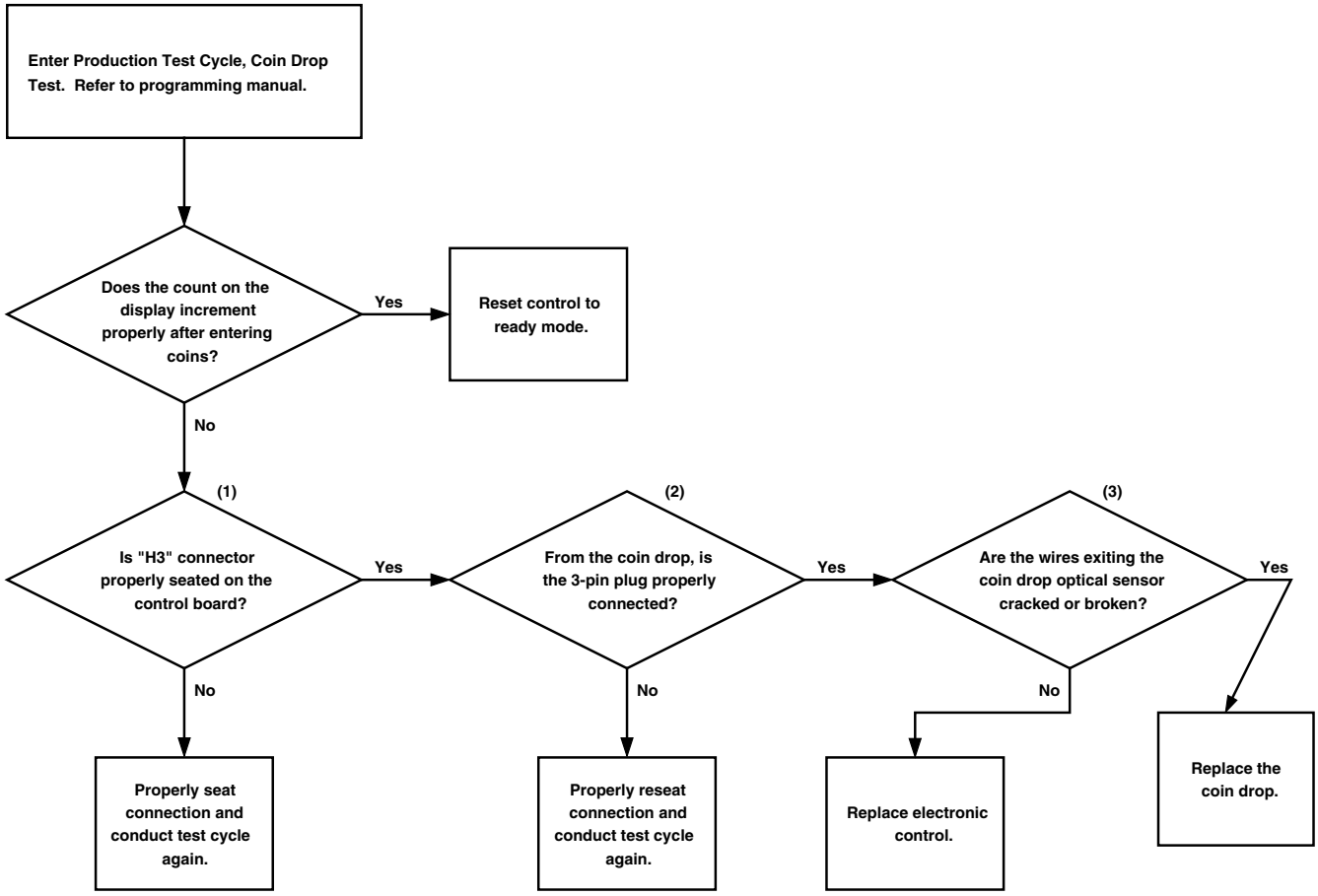

TLW300S

Coins Ignored When Entered

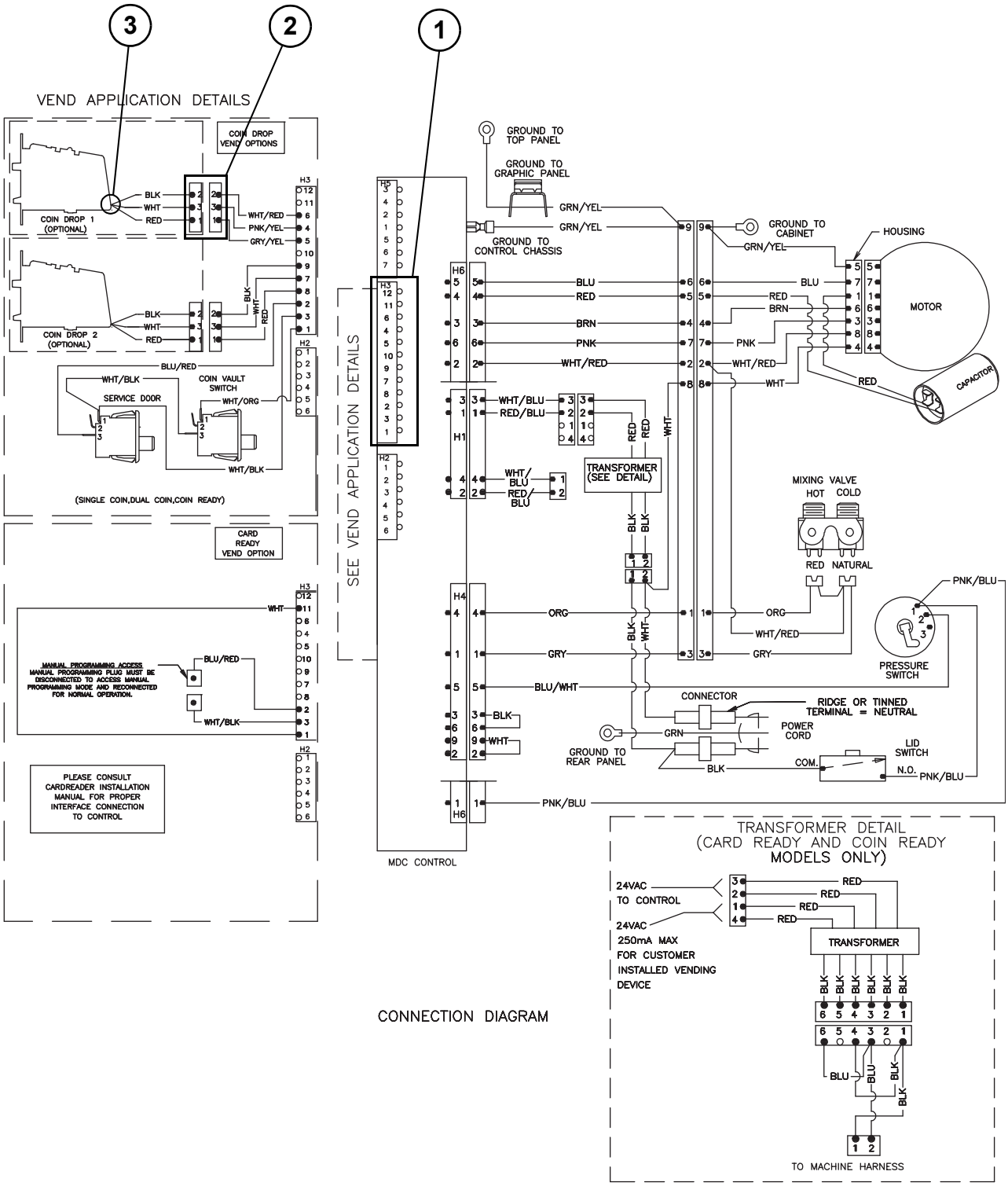

CONNECTION DIAGRAM

WARNING

FAILURE TO INSTALL, MAINTAIN, AND/OR OPERATE THIS MACHINE ACCORDING TO MANUFACTURER'S INSTRUCTIONS MAY RESULT IN CONDITIONS WHICH CAN PRODUCE BODILY INJURY AND/OR PROPERTY DAMAGE.

THIS MACHINE MANUFACTURED UNDER ONE OR MORE OF THE FOLLOWING PATENTS:
UNITED STATES NO: 3,253,874; 3,838,755; 3,845,642
CANADIAN NO: 1,008,265; 994,685
OTHER PATENTS PENDING

NOTE

POWER SUPPLY WIRING MUST HAVE CORRECT POLARITY AND GROUNDING FOR THE UNIT TO OPERATE CORRECTLY.

44. Washer Will Not Fill (Pressure Switch Diagnostic)

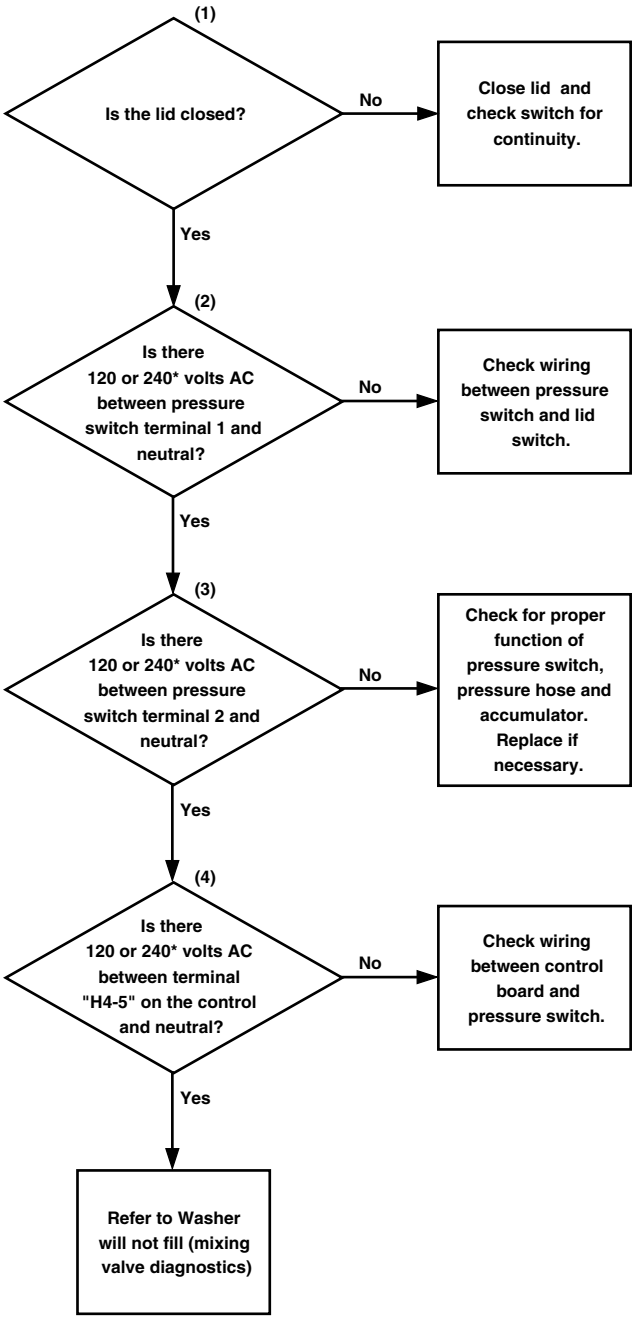

*Refer to machine serial plate for correct voltage.

TLW303S

Washer Will Not Fill (Pressure Switch Diagnostic)

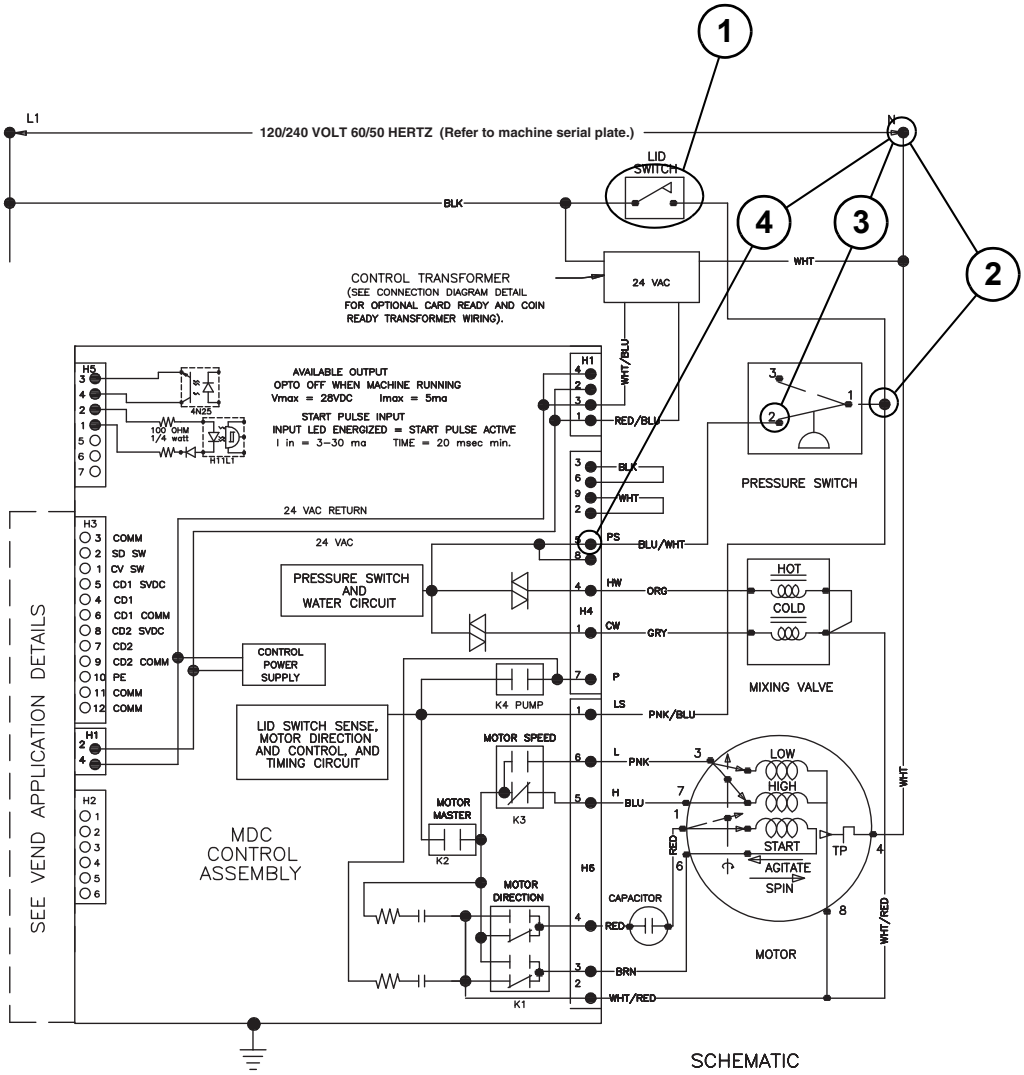

SCHEMATIC

VEND APPLICATIONS DETAILS

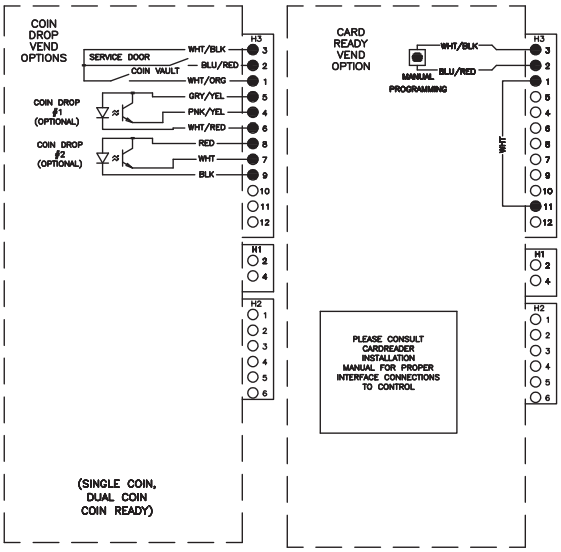

45. Washer Will Not Fill (Mixing Valve Diagnostic)

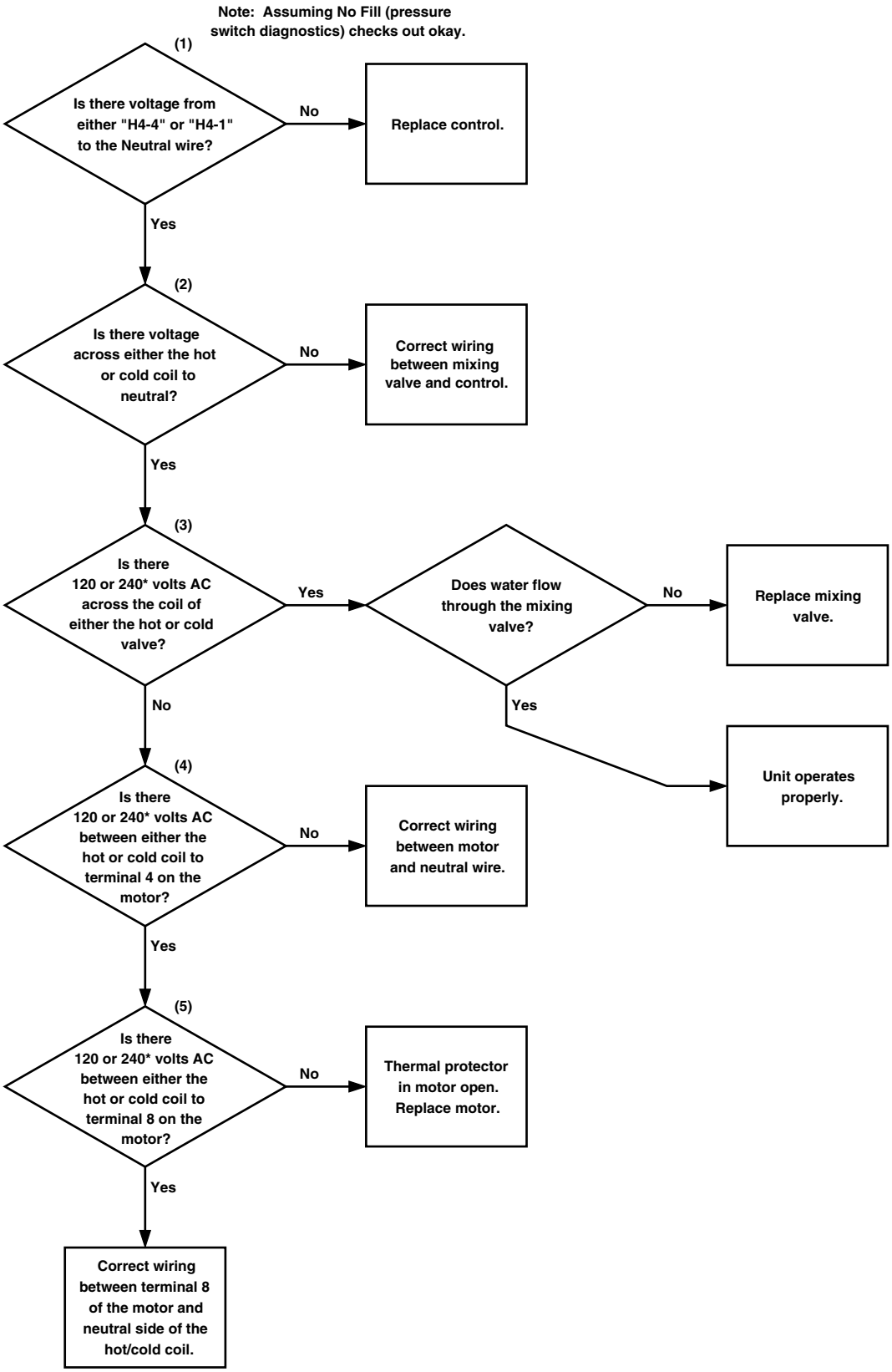

*Refer to machine serial plate for correct voltage.

TLW304S

Washer Will Not Fill (Mixing Valve Diagnostic)

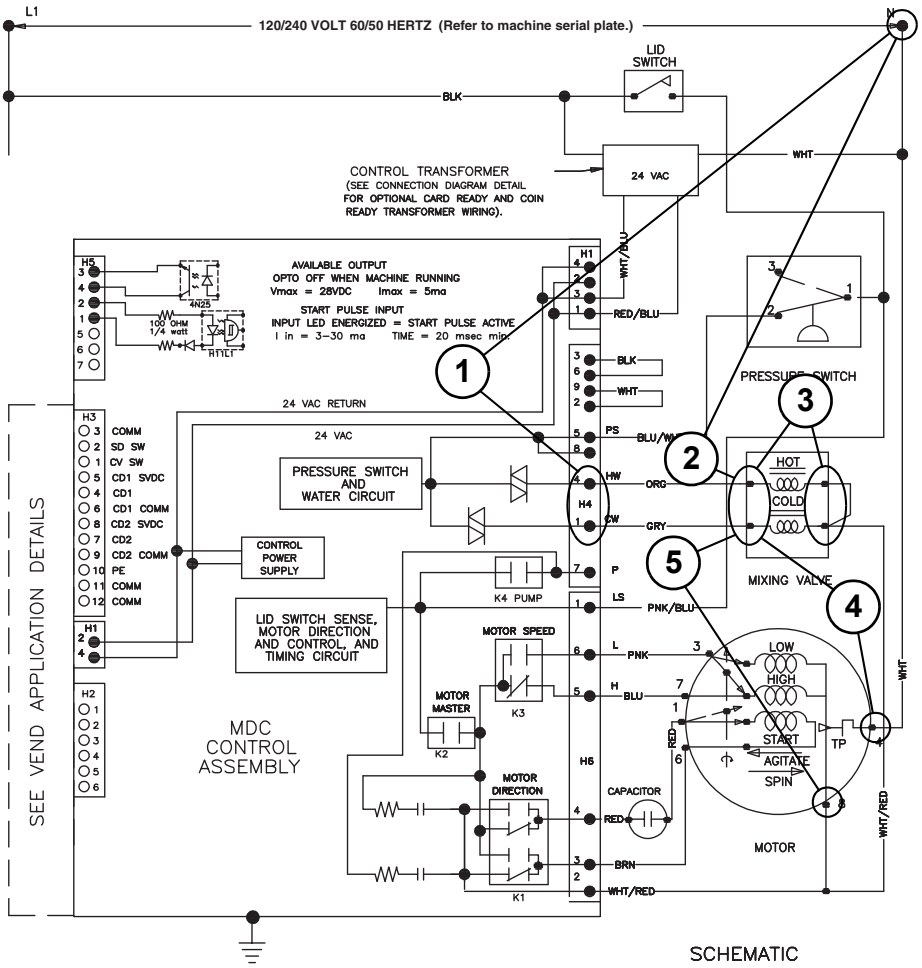

SCHEMATIC

VEND APPLICATIONS DETAILS

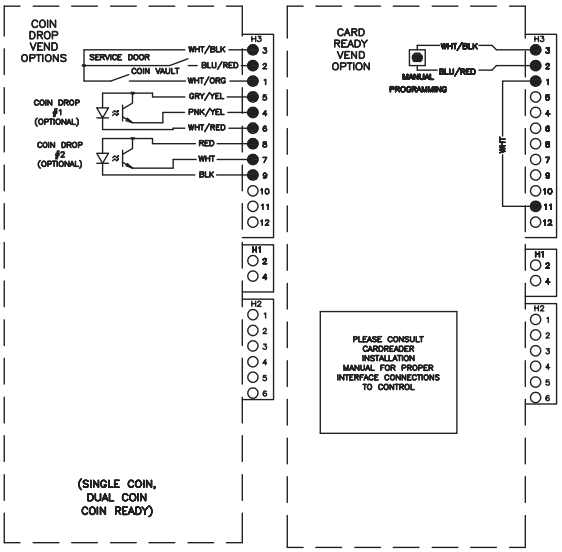

46. Washer Over Fills (Pressure Switch Open)

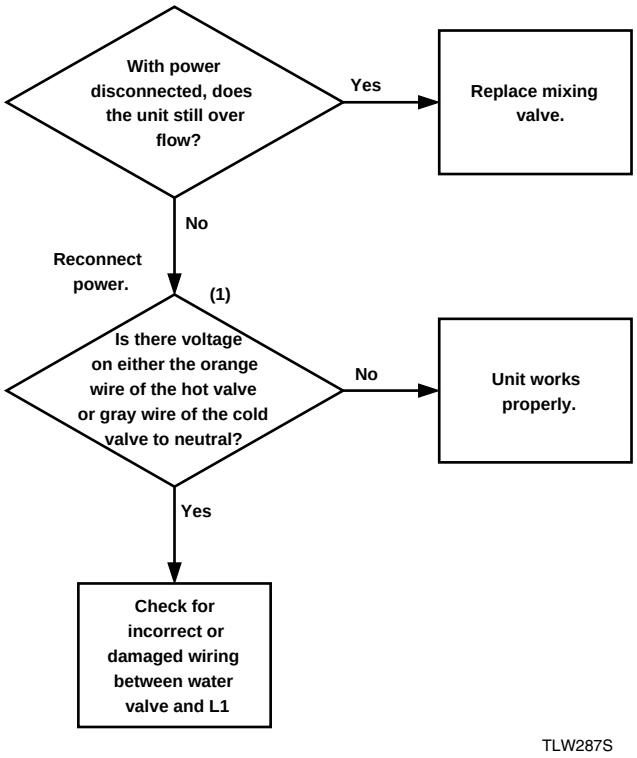

Washer Over Fills (Pressure Switch Open)

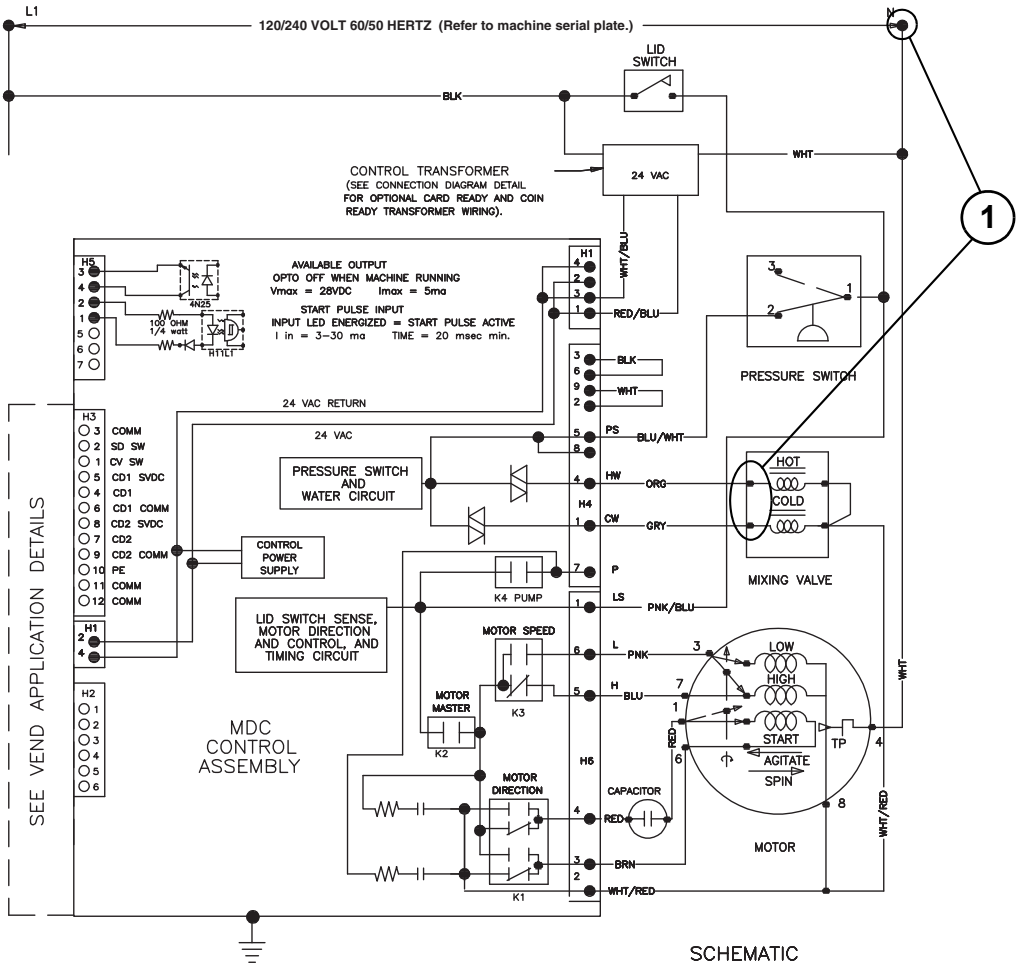

VEND APPLICATIONS DETAILS

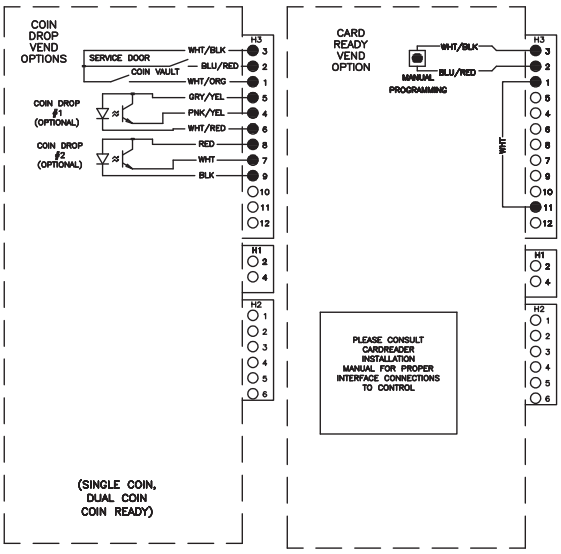

47. No Agitation – Low and High Speed

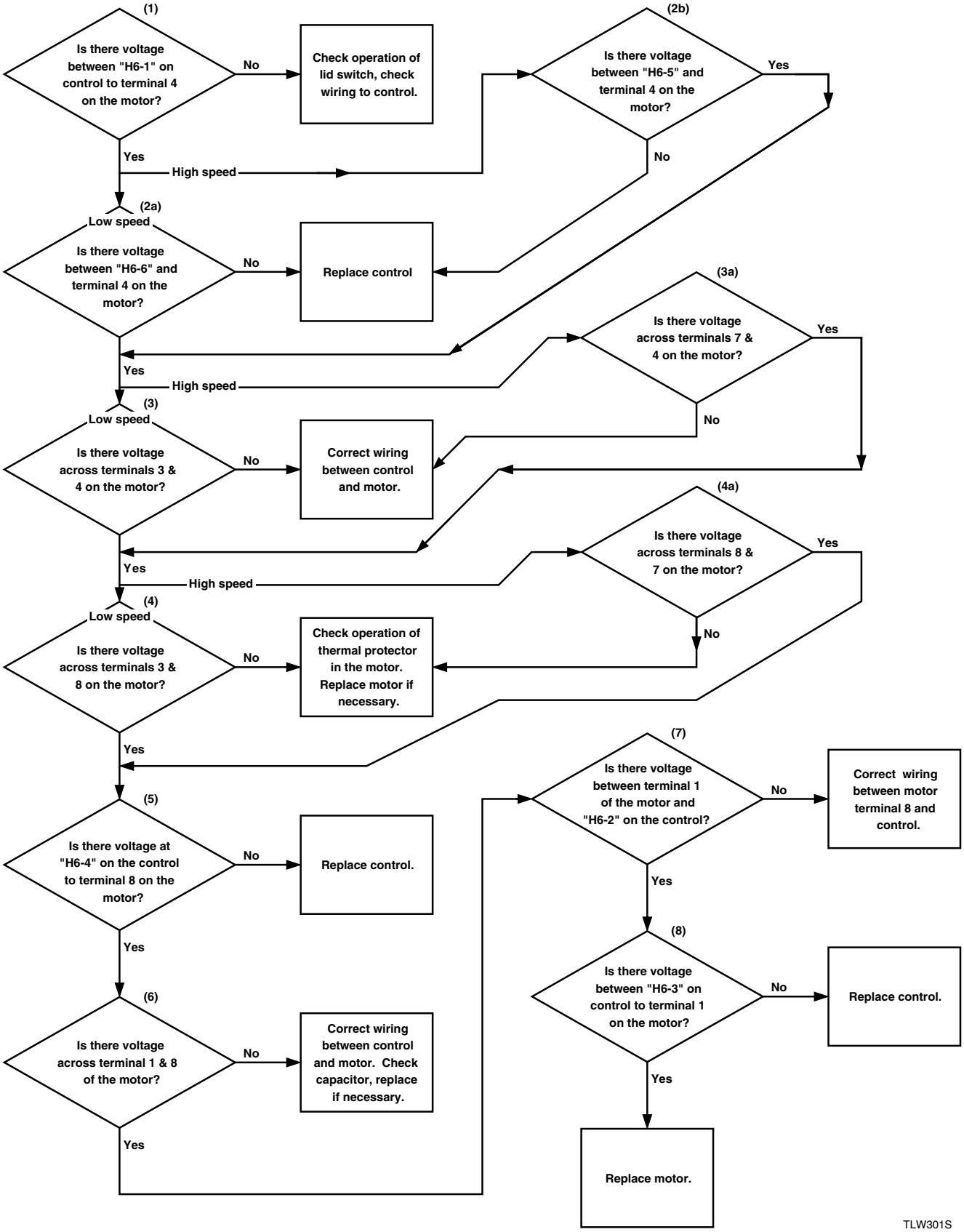

No Agitation – Low and High Speed

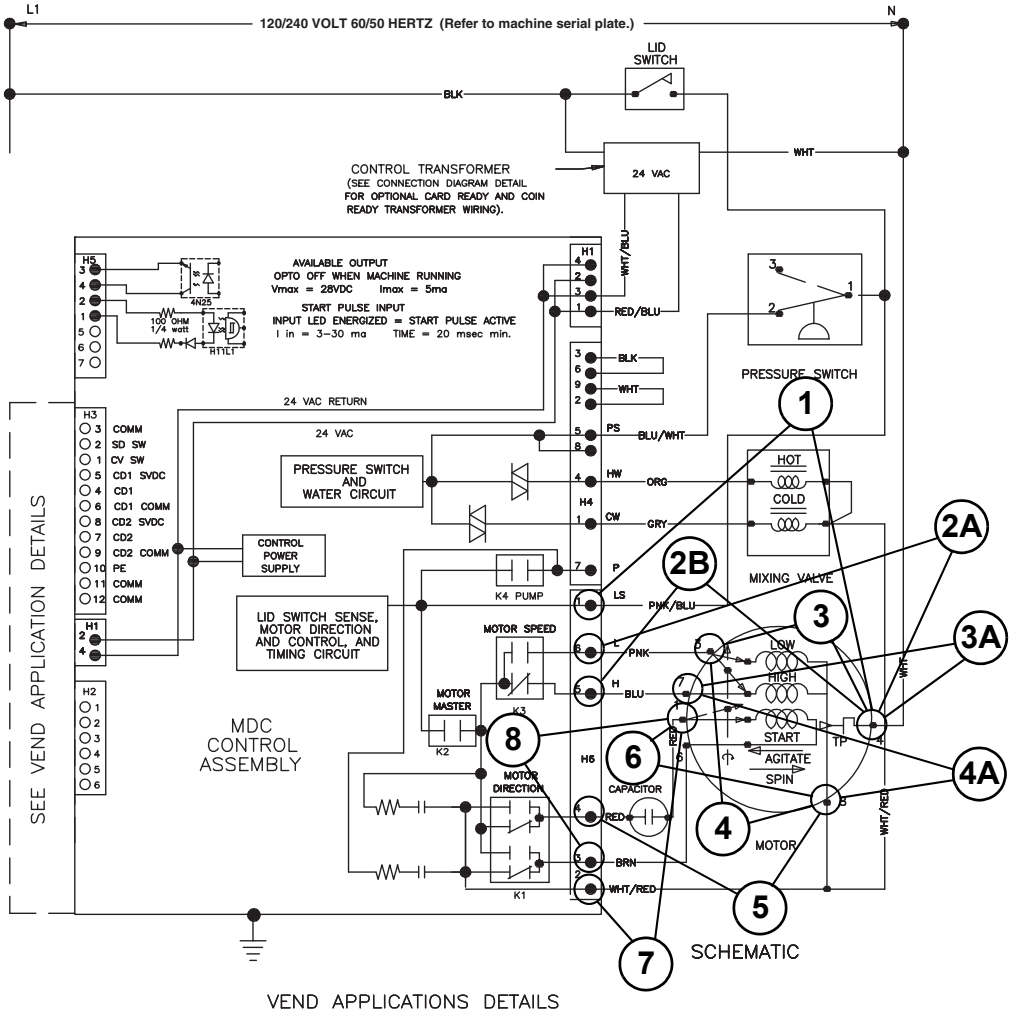

VEND APPLICATIONS DETAILS

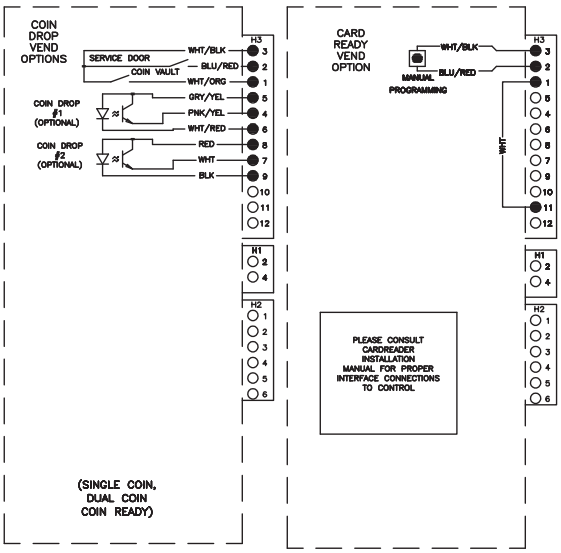

48. Washer Will Not Spin – High Speed

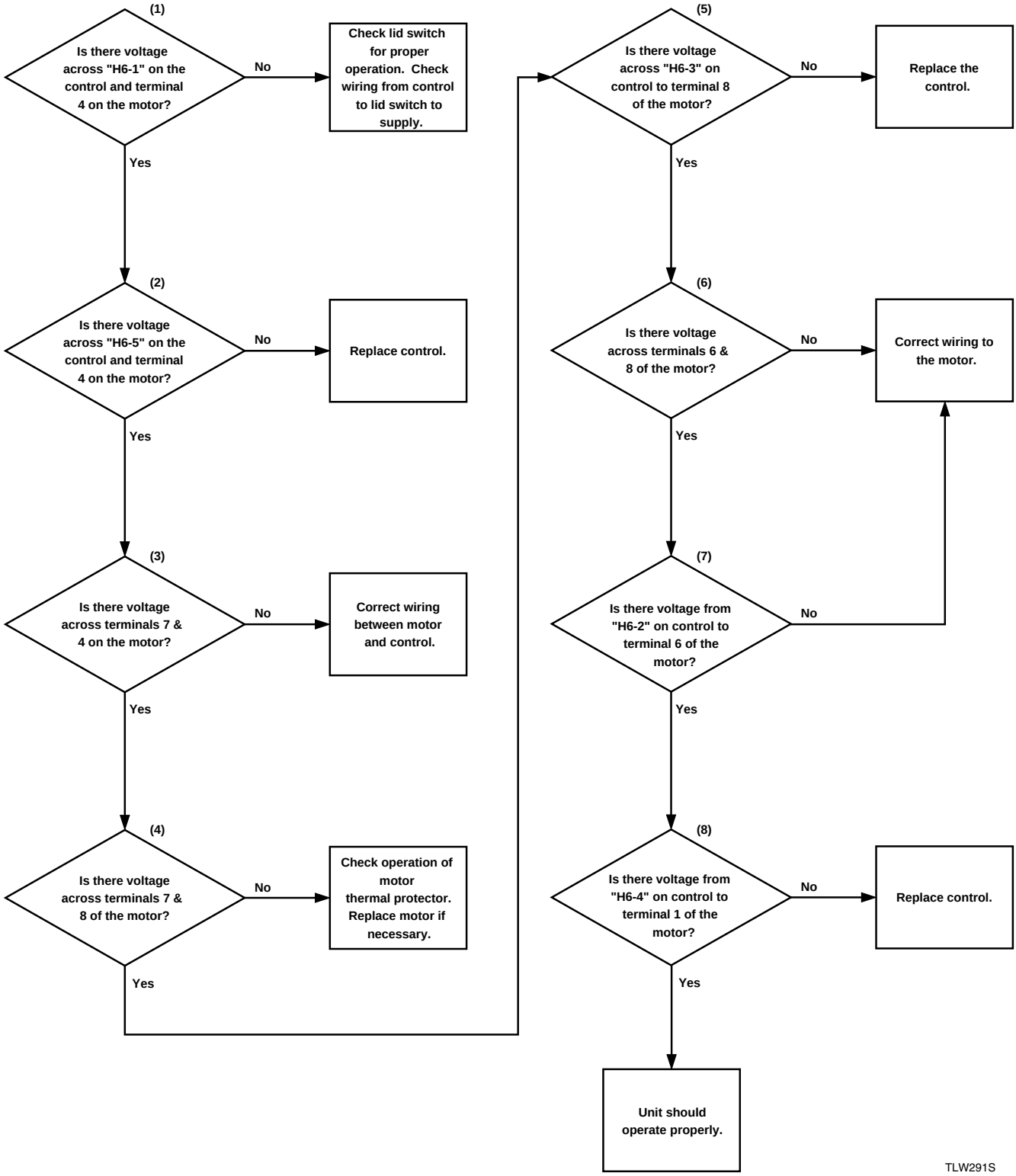

Washer Will Not Spin – High Speed

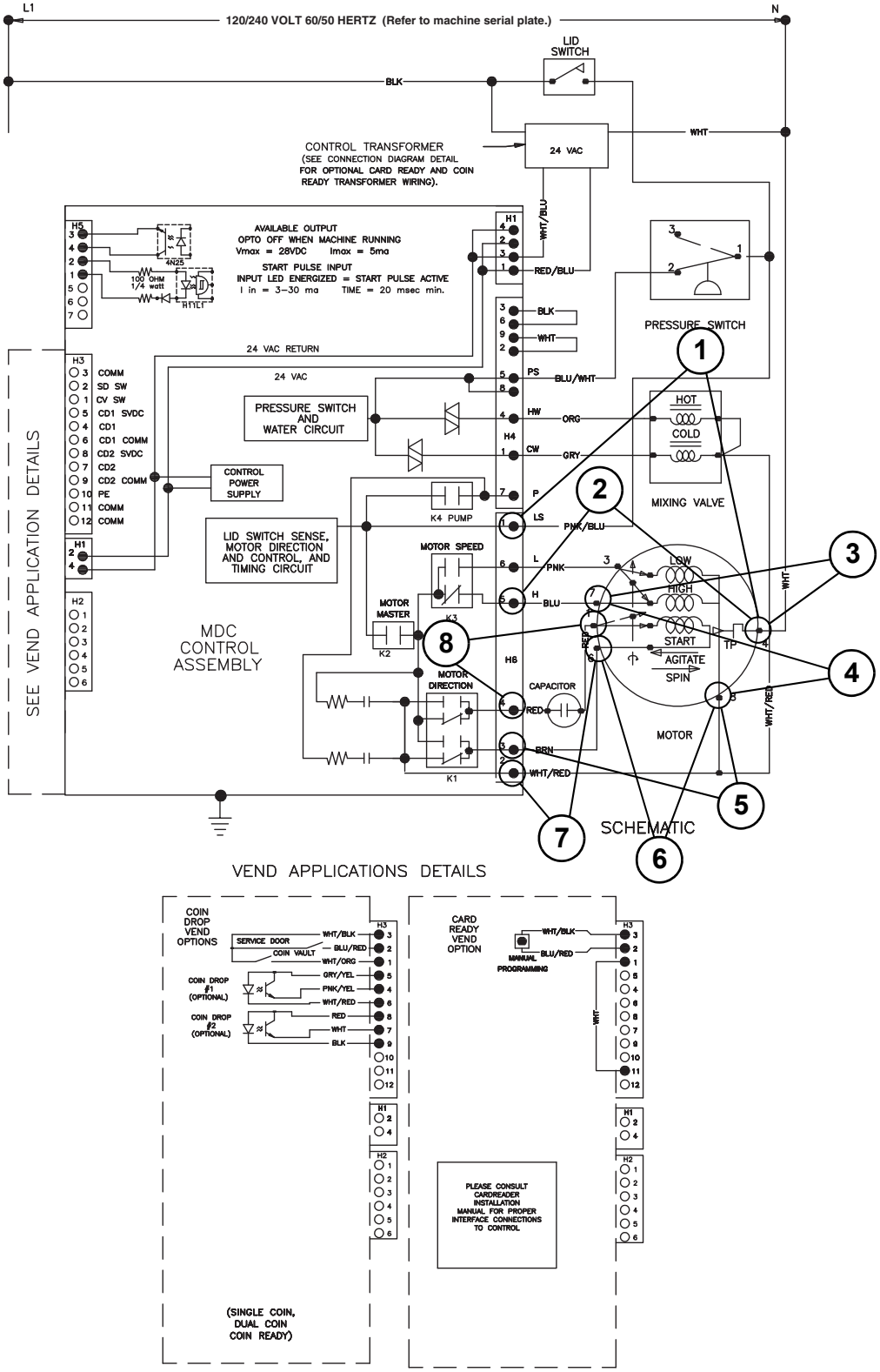

VEND APPLICATIONS DETAILS

49. Washer Will Not Spin – Low Speed

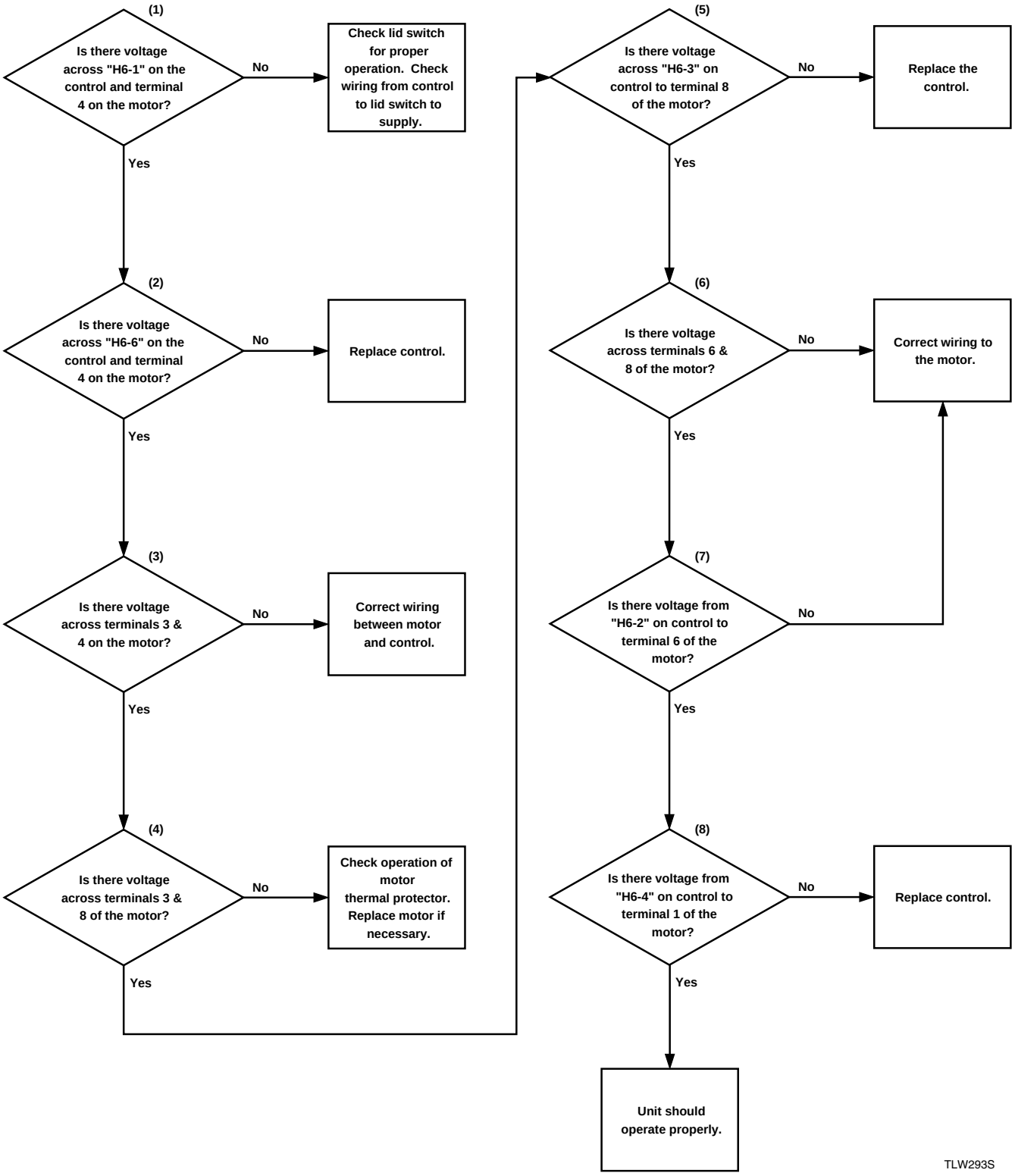

Washer Will Not Spin – Low Speed

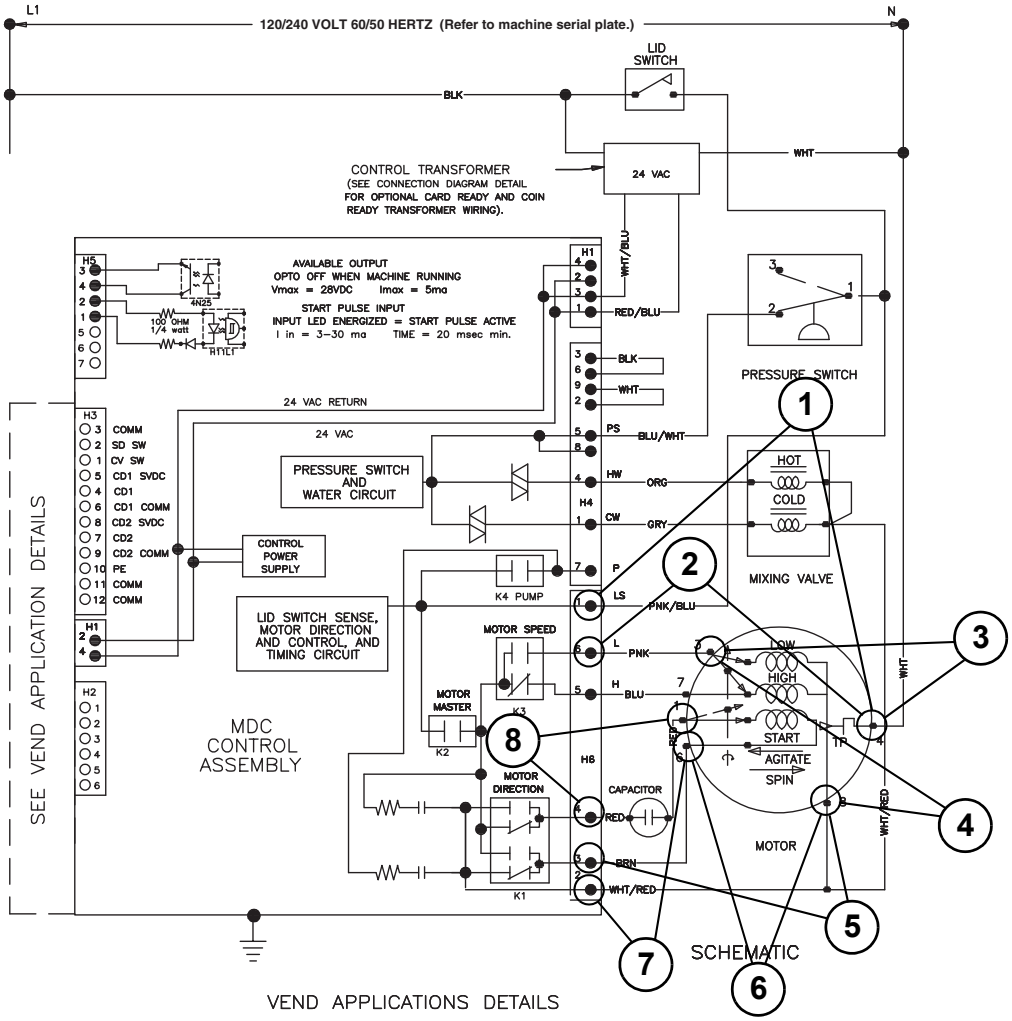

VEND APPLICATIONS DETAILS

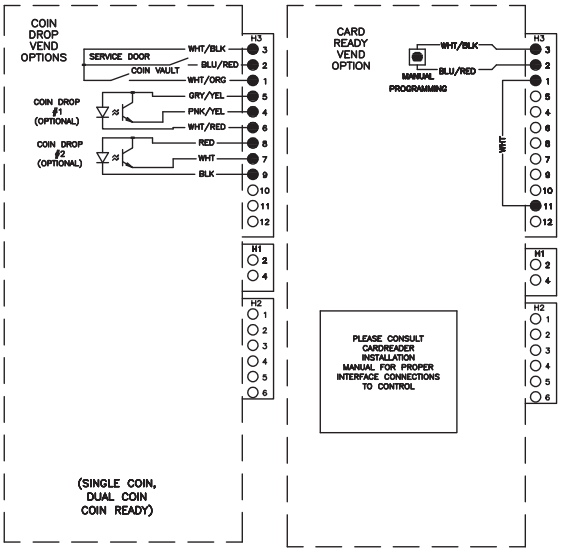

Notes

Troubleshooting

NetMaster Models

WARNING

To reduce the risk of electric shock, fire, explosion, serious injury or death:
- **Disconnect electric power to the washer before servicing.**
- **Never start the washer with any guards/panels removed.**
- **Whenever ground wires are removed during servicing, these ground wires must be reconnected to ensure that the washer is properly grounded.**

W003

50. NetMaster Error Code Listing

Errors beginning with “EI” refer to NetMaster Infrared communication errors. Errors beginning with “EC” refer to NetMaster card reader errors. All other errors refer to electronic control errors.

Display	Description	Cause/Corrective Action
EI:00	General Communications Error	Communication problem. Re-aim Micro-wand and try again.
EI:01	Bad Transmission	Communication problem. Re-aim Micro-wand and try again.
EI:02	Device Timeout	Communication problem. Re-aim Micro-wand and try again.
EI:03	Invalid Command Code	Wrong machine type. Before downloading, ensure data is for current machine type.
EI:04	Expecting Upload Request	Communication problem. Re-aim Micro-wand and try again.
EI:05	Invalid or Out-of-Range Data	Wrong machine type. Before downloading, ensure data is for current machine type.
EI:06	Invalid Data Code	Wrong machine type. Before downloading, ensure data is for current machine type.
EI:07	Error Writing to RTC	Control failure. Control may need to be replaced.
EI:08	Error Writing to EEPROM	Control failure. Control may need to be replaced.
EI:09	CRC-16 Error	Communication problem. Re-aim Micro-wand and try again.
EI:0A	Invalid Machine Type	Wrong machine type. Before downloading, ensure data is for current machine type.
EI:0F	Invalid Wakeup or IR Disabled	Communication problem or IR is disabled. Manually enable IR on control/Re-aim Micro-wand and try again.
EC:00	General Communication Error	Communication problem. Try card again.
EC:02	Timeout Error	Communication problem. Try card again.

Display	Description	Cause/Corrective Action
EC:03	Invalid Command Code	Wrong machine type. Before downloading, ensure data is for current machine type.
EC:05	Invalid or Out-of-Range Data	Wrong machine type. Before downloading, ensure data is for current machine type.
EC:06	Invalid Data Code	Wrong machine type. Before downloading, ensure data is for current machine type.
EC:09	Corrupted Data Error	Communication error. Try card again.
EC:0A	Invalid Machine Type	Wrong machine type. Before downloading, ensure data is for current machine type.
EC:19	No Card Reader Communication	Communication problem. Power down, power up and try again. If error persists, control or reader is bad.
EC:20	Unreadable Card	Bad card/ dirty contact. Clean chip on card or card reader contacts. Try card again. If error persists, card may be bad.
EC:21	Security ID Mismatch	Wrong card. Use card with correct security code.
EC:22	Site Code Mismatch	Wrong card. Use card with correct site code.
EC:23	Card Maximum Value Exceeded	Value on card over max. Use a card which does not exceed maximum value.
EC:24	Insufficient Memory on Card	Card memory is full. Download card contents to PC and clear card for re-use.
EC:25	Card Reader Malfunction	Bad Card Reader. Card Reader may need to be replaced.
EC:26	Card Write Error	Try card again. If error persists, card may be bad.
EC:27	Diagnostic Test Card Write Failure	Bad Card Reader. Card Reader may need to be replaced.
EC:28	Diagnostic Test Card Read Failure	Bad Card Reader. Card Reader may need to be replaced.
EC:29	Diagnostic Test Memory Test Failure	Bad Card Reader. Card Reader may need to be replaced.
EC:2A	Diagnostic Test Card Interface Failure	Bad Card Reader. Card Reader may need to be replaced.
EC:2b	Diagnostic Test Flash Checksum Failure	Bad Card Reader. Card Reader may need to be replaced.
EC:2C	Bad Biberon or Non-biberon Device	Bad Card Reader. Card Reader may need to be replaced.
EC:2d	Firmware Update Failed, S/W (Software) Intact	Firmware load failed. Card Reader may need to be replaced.

Display	Description	Cause/Corrective Action
EC:2E	Firmware Update Failed, S/W Not Intact	Bad firmware in reader. Card Reader may need to be replaced.
EC:2F	Firmware Updated, S/W Not Intact	Bad firmware in reader. Card Reader may need to be replaced.
EC:30	Timeout Error	Card Reader may need to be replaced.
EC:31	Hotlisted Card Inserted Into Reader	Card hotlisted. Control will destroy card.
EC:50	Loyalty Purse Read Error	Try card again. If error persists, card may be bad.
EC:56	Loyalty Purse Write Error	Try card again. If error persists, card may be bad.
Right most DP (decimal point) Lit	Network Communication Error	Communication problem. Wait for 1.5 minutes for error to clear. If it doesn't, power-down and power-up the machine. If error persists, control or Network Board may need to be replaced.
Err	Coin Error	Invalid coin pulse.
Alrm	Break-in Alarm Error	Service door or coin vault switches.
OFF	Break-in Alarm Shutdown Error	Service door or coin vault switches.
E:FL	Fill Error	Pressure switch fails to open in 30 minutes in any fill agitate cycle.
E:dr	Drain Error	Maximum drain time exceeded or water sensed at end of spin step.
E:00	General Error	Re-aim Micro-wand and try again.
E:01	Proximity Error	Micro-wand is improperly aimed at infrared communicator (angle or distance). Re-aim Micro-wand and try again.
E:02	IR Communication Disconnection	Micro-wand removed before communication complete. Re-aim micro-wand and try again.
E:05	Invalid Value Communication	Invalid code downloaded from Micro-wand to Electronic Control. Before downloading, ensure data is for current machine type.
E:07	Inoperative Control	Replace control.
E:08	Inoperative Control	Replace control.
E:09	Proximity Error	Micro-wand is improperly aimed at infrared communicator (angle or distance). Re-aim Micro-wand and try again.
EI:0A	Proximity Error	Micro-wand is improperly aimed at infrared communicator (angle or distance). Re-aim Micro-wand and try again.

Display	Description	Cause/Corrective Action
E:0B	IR Communication Disconnection	Micro-wand removed before communication complete. Re-aim Micro-wand and try again.
E:0C	IR Communication Disconnection	Micro-wand removed before communication complete. Re-aim Micro-wand and try again.
E:0d	Pressure Switch Error	Check fill and drain hoses for improper installation and kinks. Check fill electrical circuit. Replace inoperative switches or wires.
E:0F	IR Communicator Programmed Off	Reprogram infrared communicator on. Manually enable IR on control/Re-aim micro-wand and try again.
Err	Coin Error	Inoperative coin sensor. Check coin drop area and remove obstructions. Possible tampering. Evaluate security procedures.

51. Microwand Does Not Communicate With Control

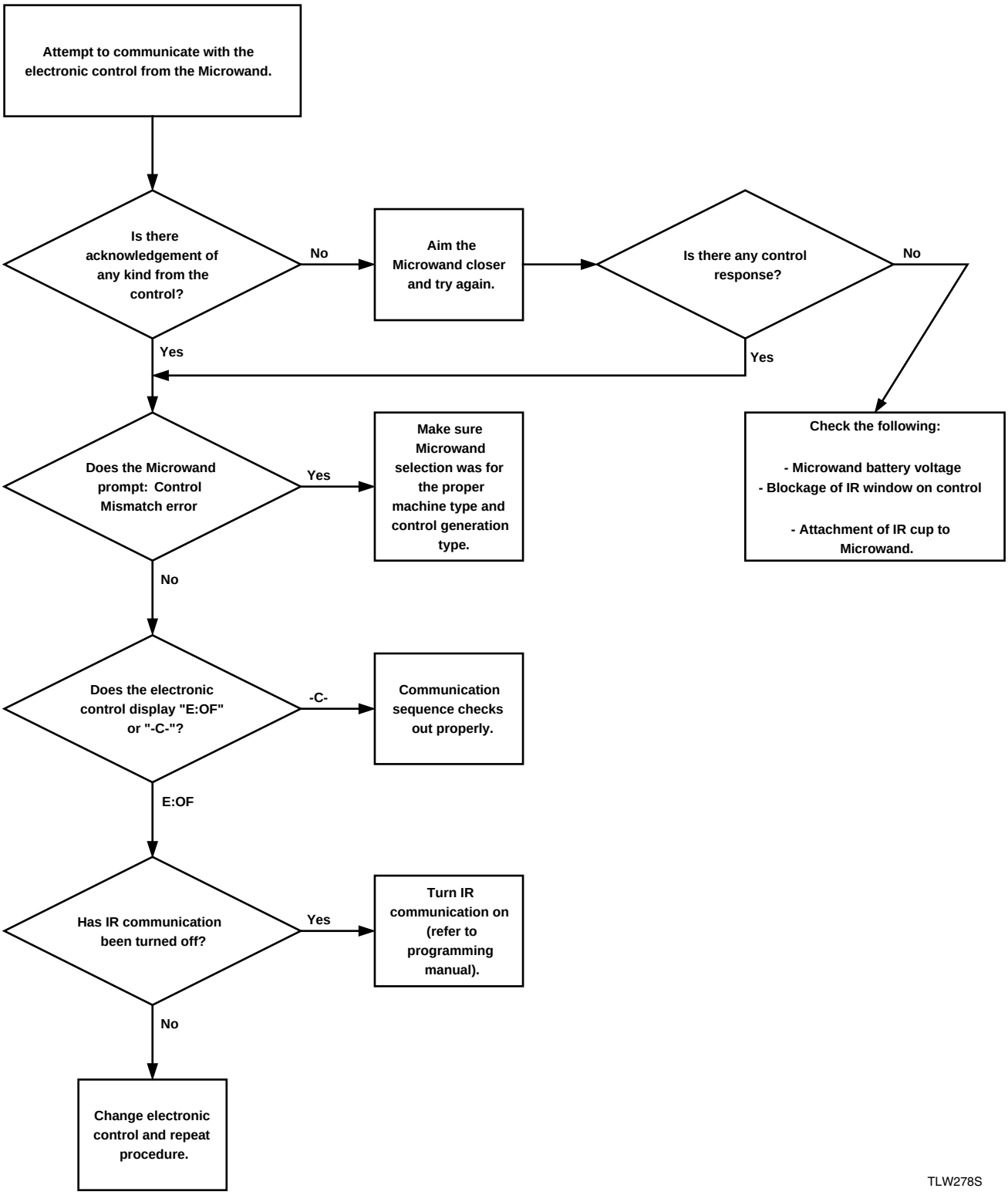

52. No Visible Display on Control

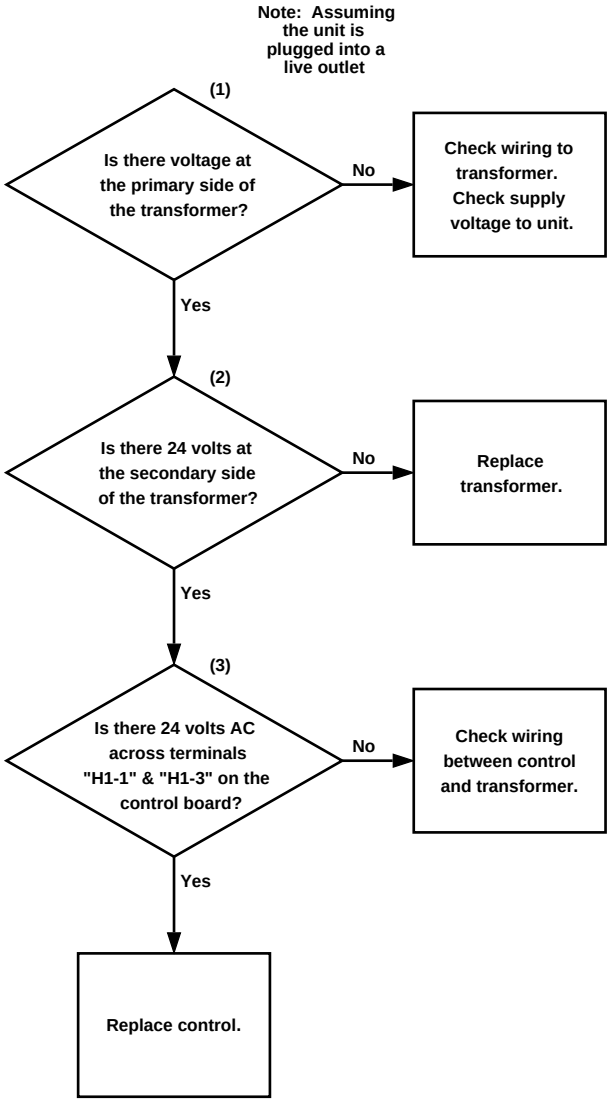

TLW279S

No Visible Display on Control

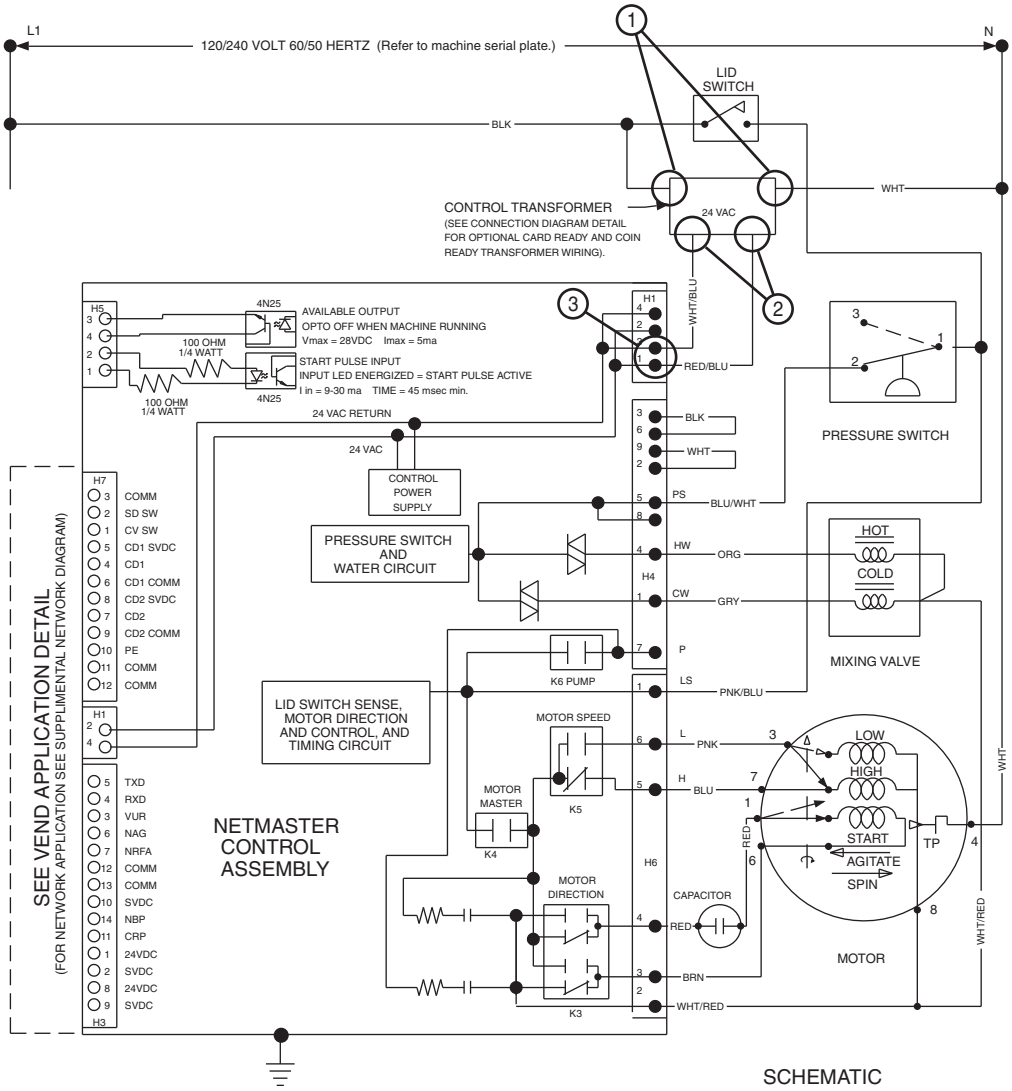

SCHEMATIC

VEND APPLICATIONS DETAILS

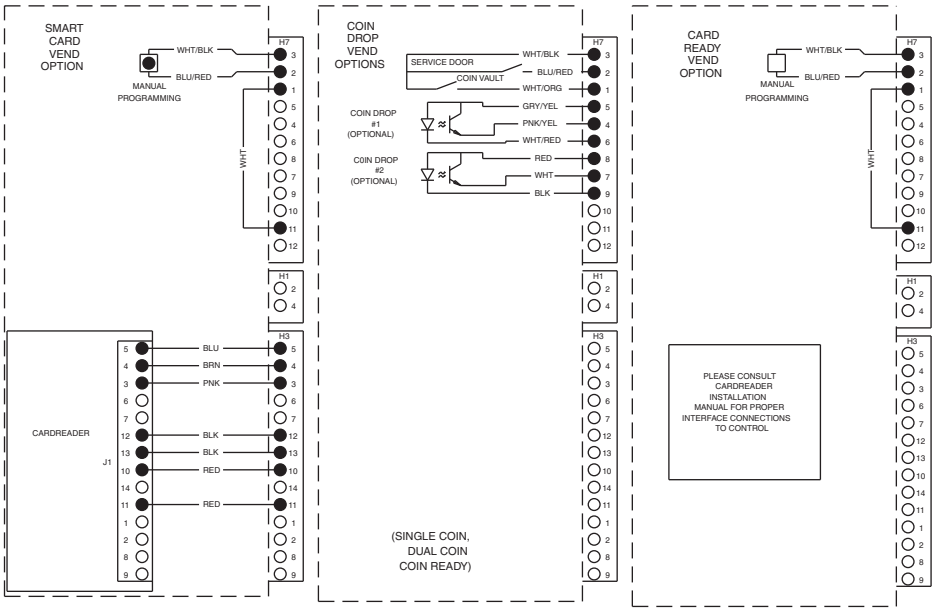

TLW318S

53. Coins Ignored When Entered

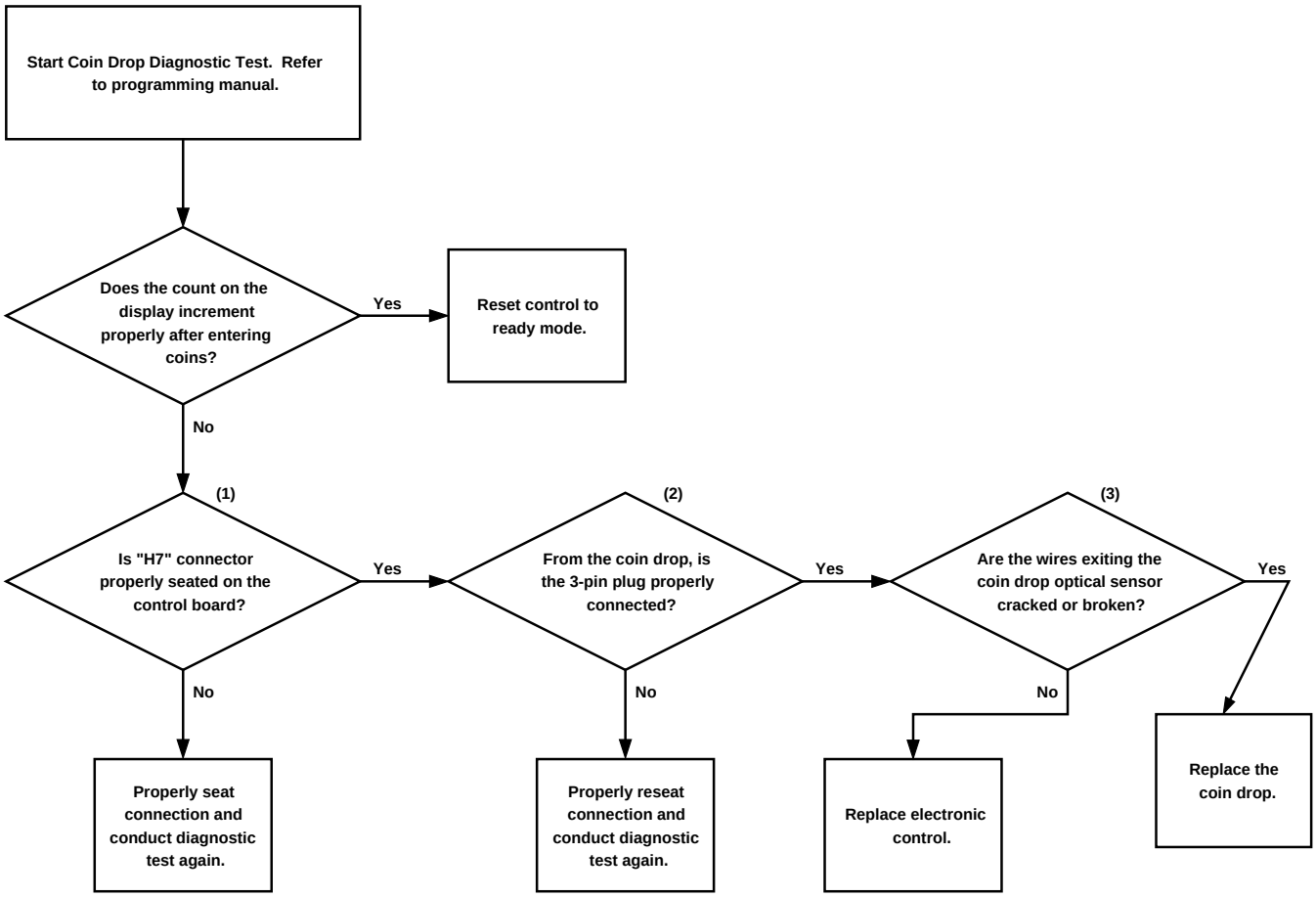

Coins Ignored When Entered

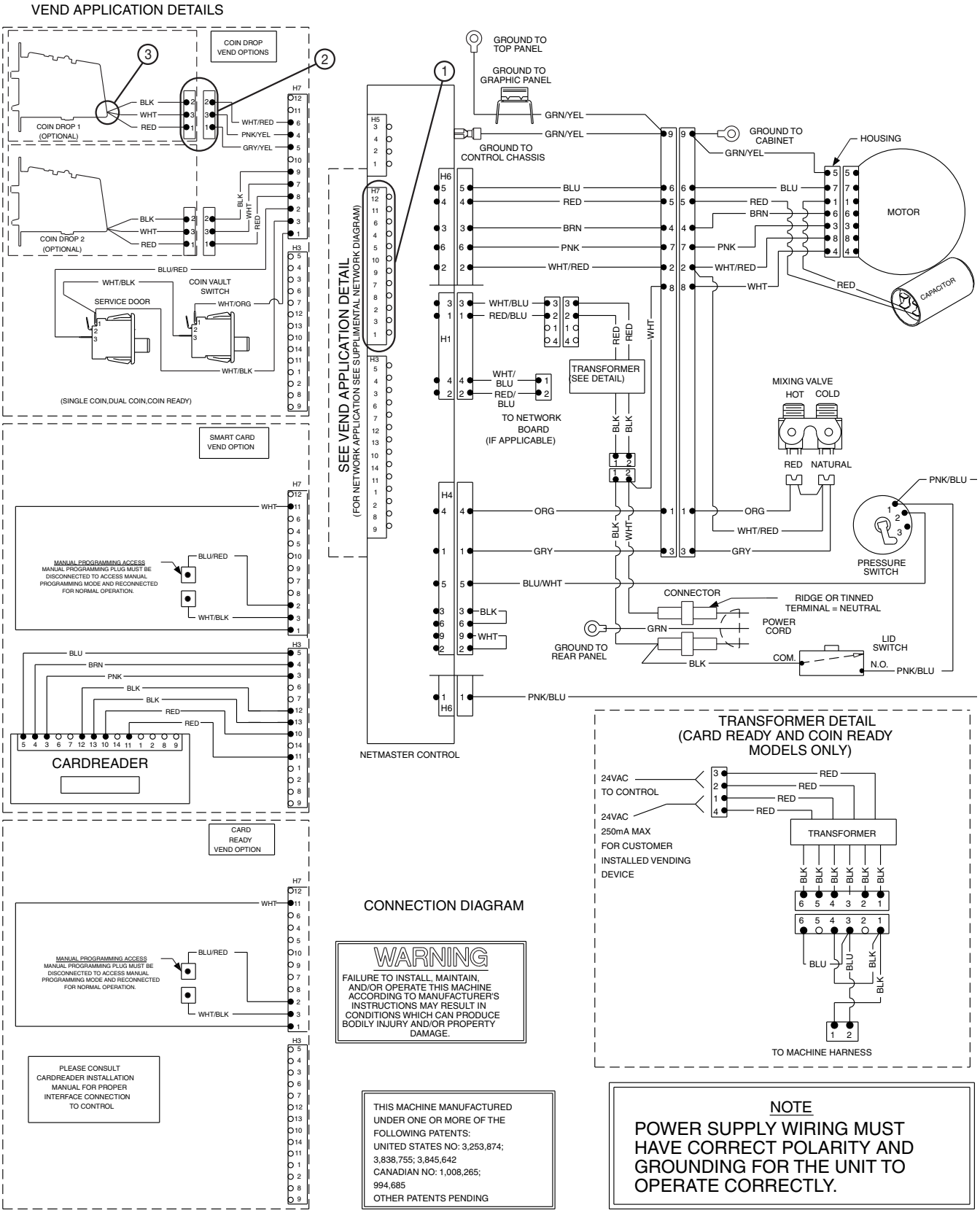

54. Washer Will Not Fill (Pressure Switch Diagnostic)

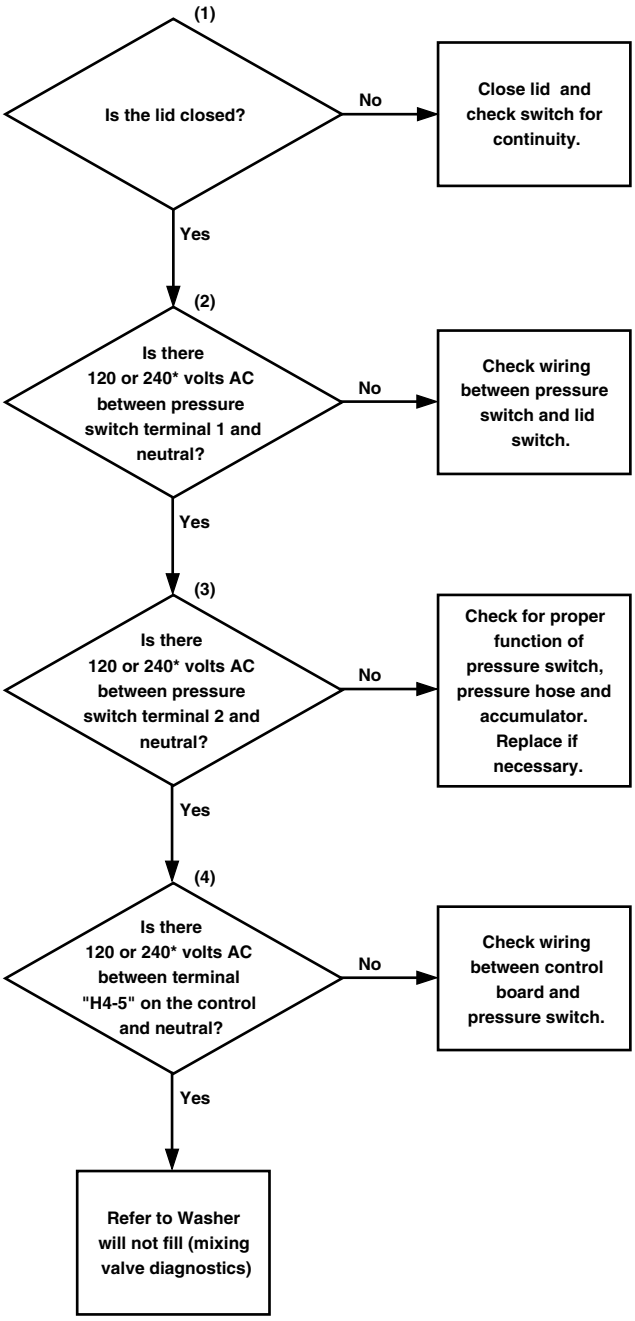

***Refer to machine serial plate for correct voltage.**

TLW303S

Washer Will Not Fill (Pressure Switch Diagnostic)

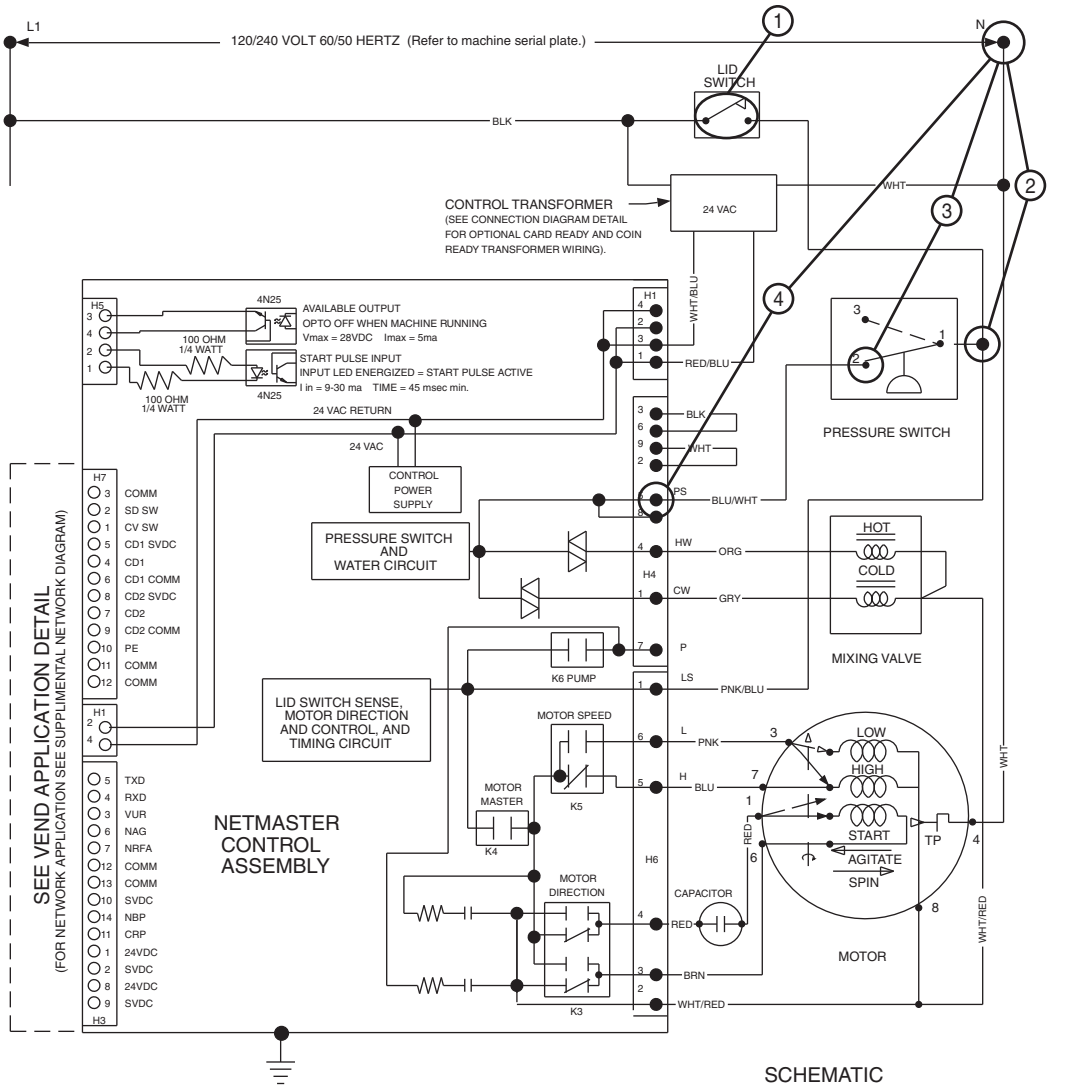

VEND APPLICATIONS DETAILS

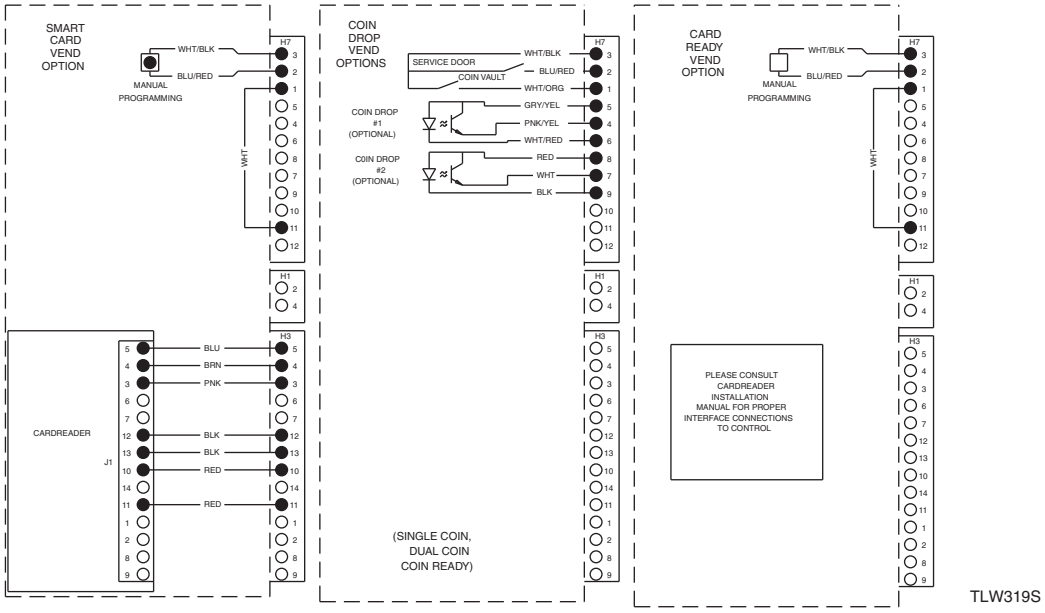

55. Washer Will Not Fill (Mixing Valve Diagnostic)

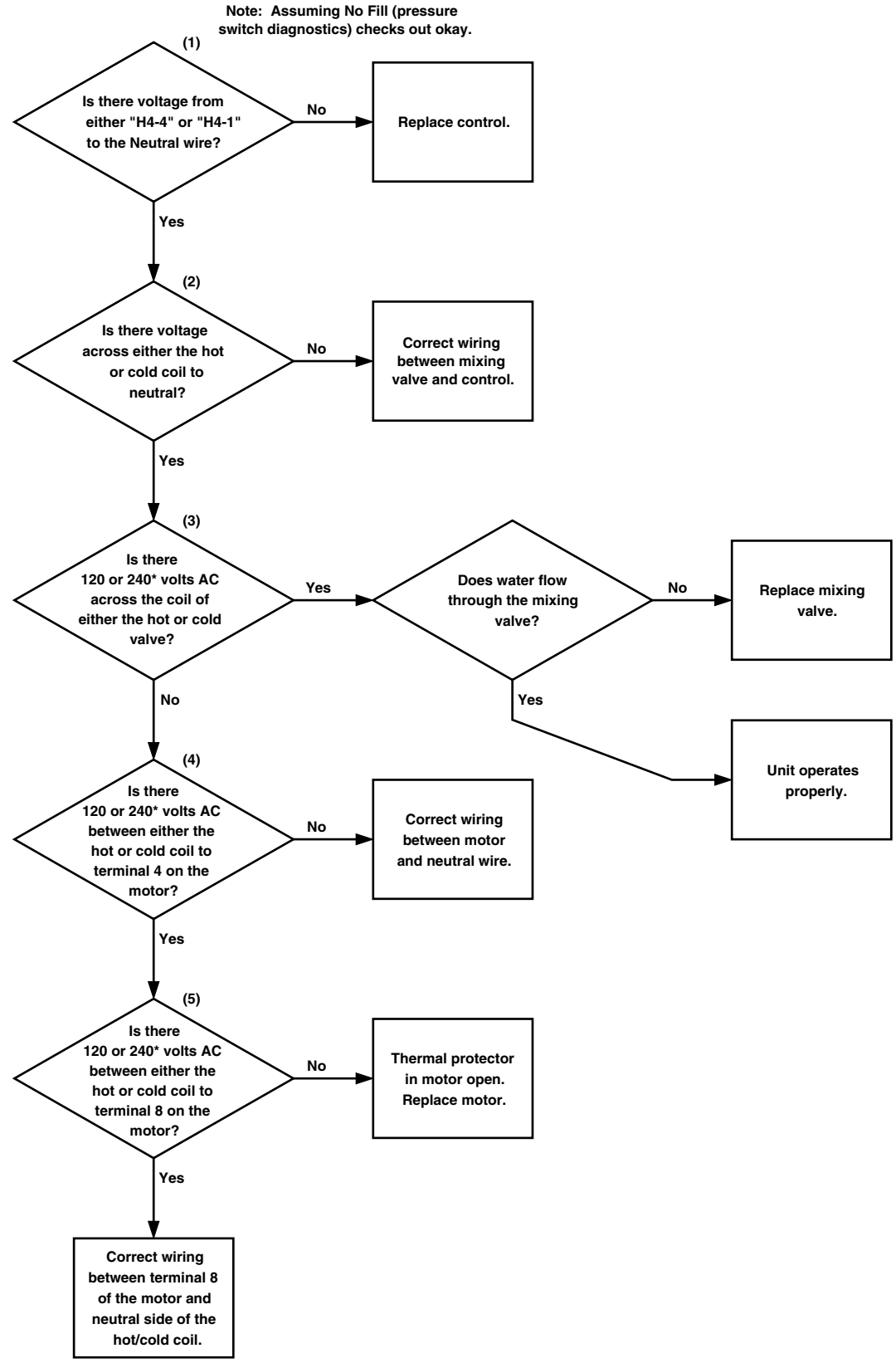

*Refer to machine serial plate for correct voltage.

TLW304S

Washer Will Not Fill (Mixing Valve Diagnostic)

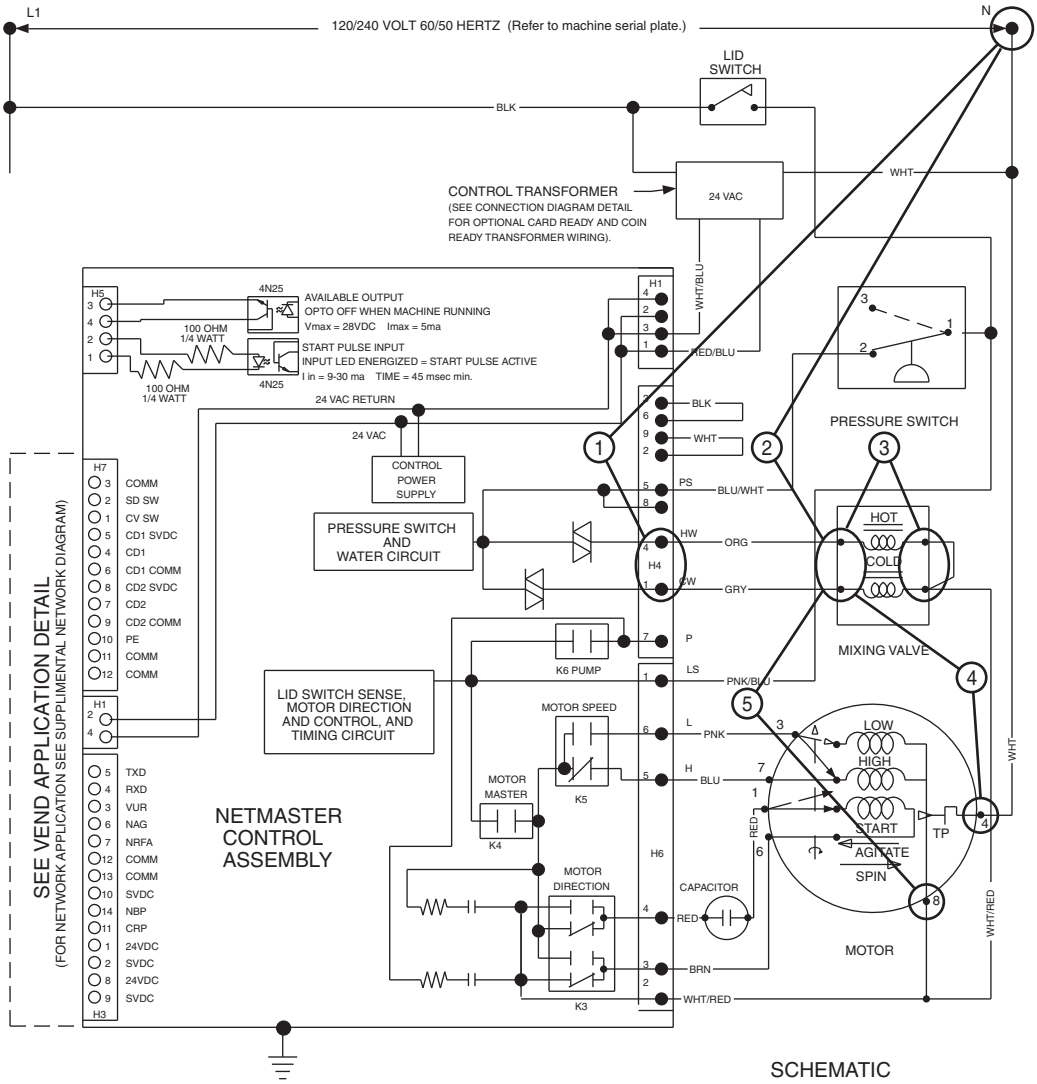

SCHEMATIC

VEND APPLICATIONS DETAILS

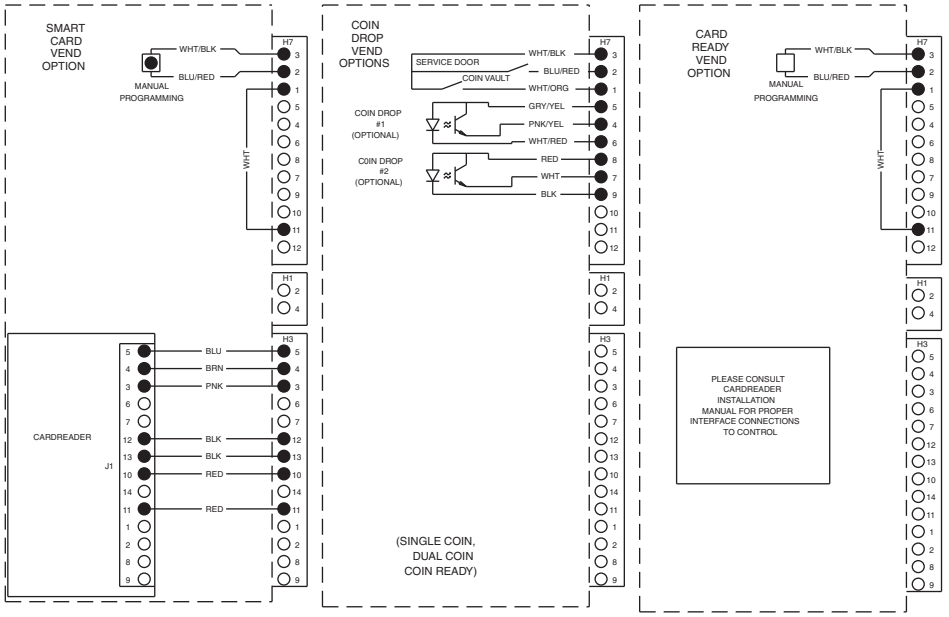

TLW320S

56. Washer Over Fills

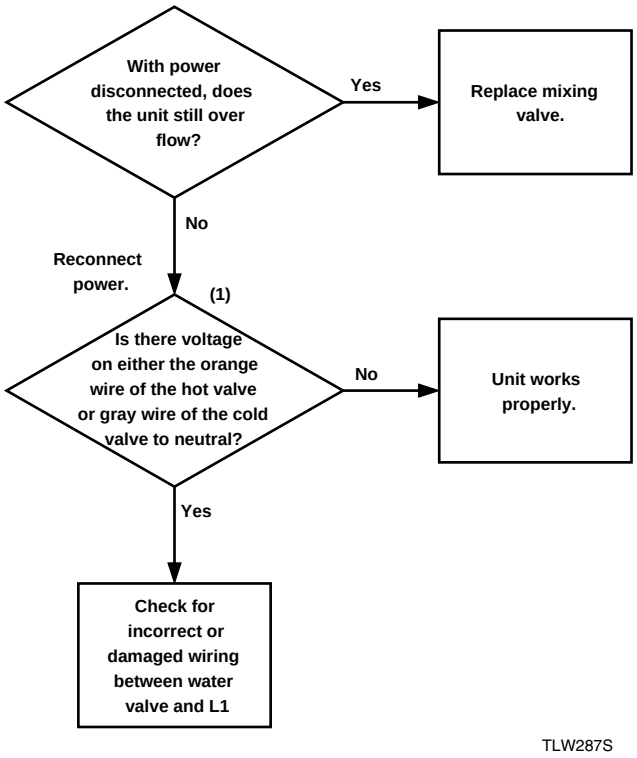

Washer Over Fills

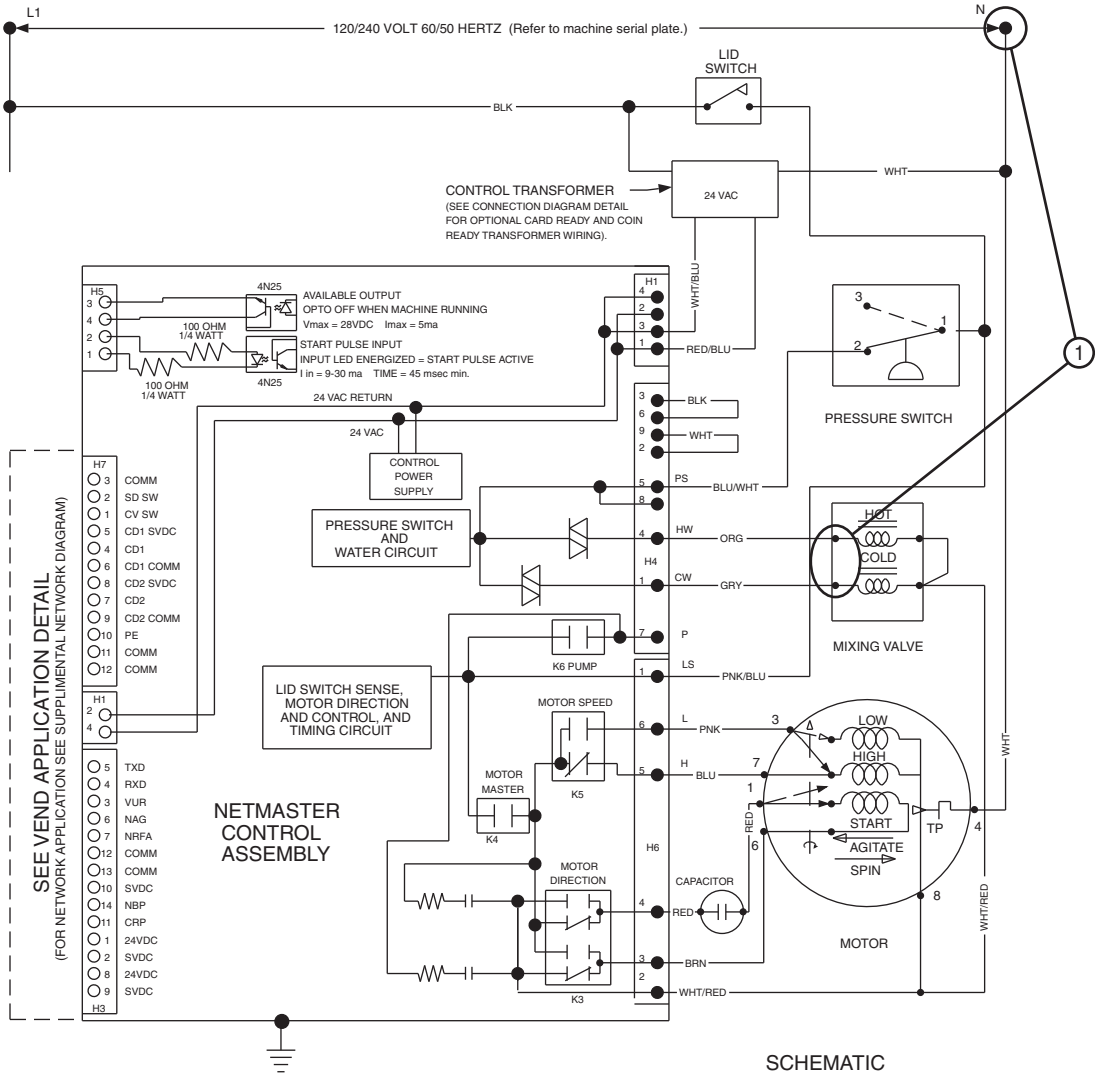

SCHEMATIC

VEND APPLICATIONS DETAILS

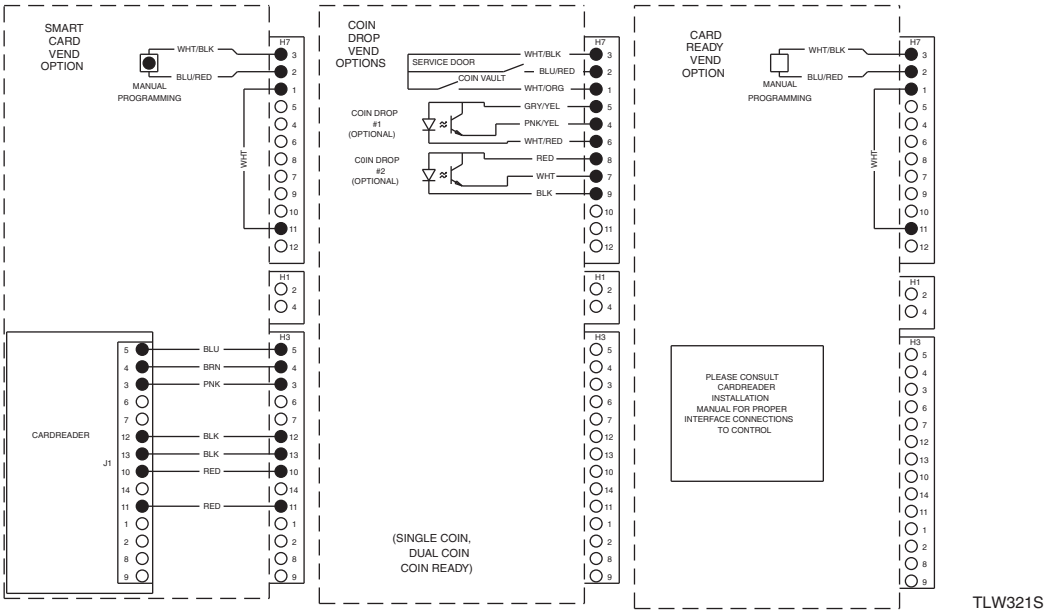

57. No Agitation – Low and High Speed

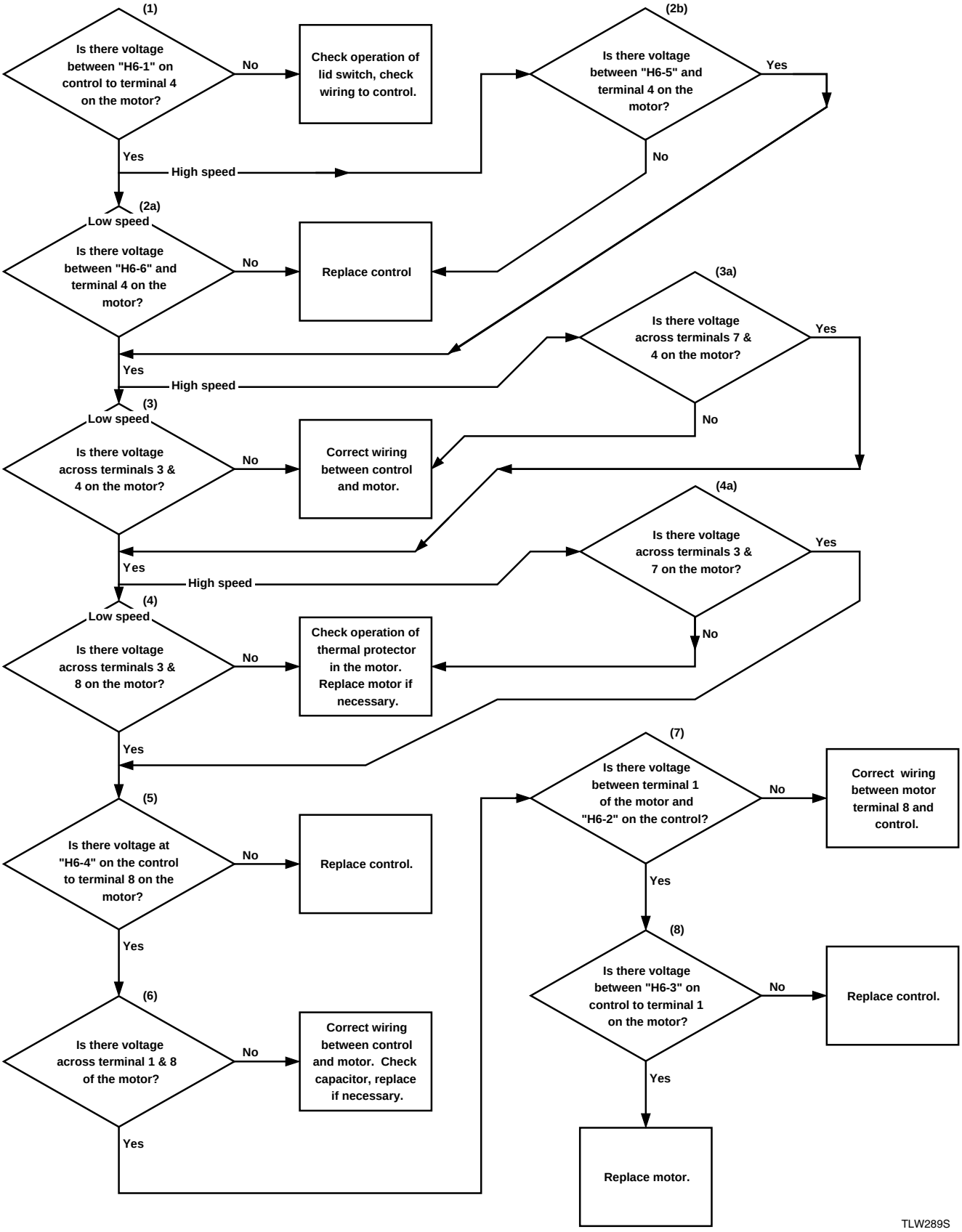

No Agitation – Low and High Speed

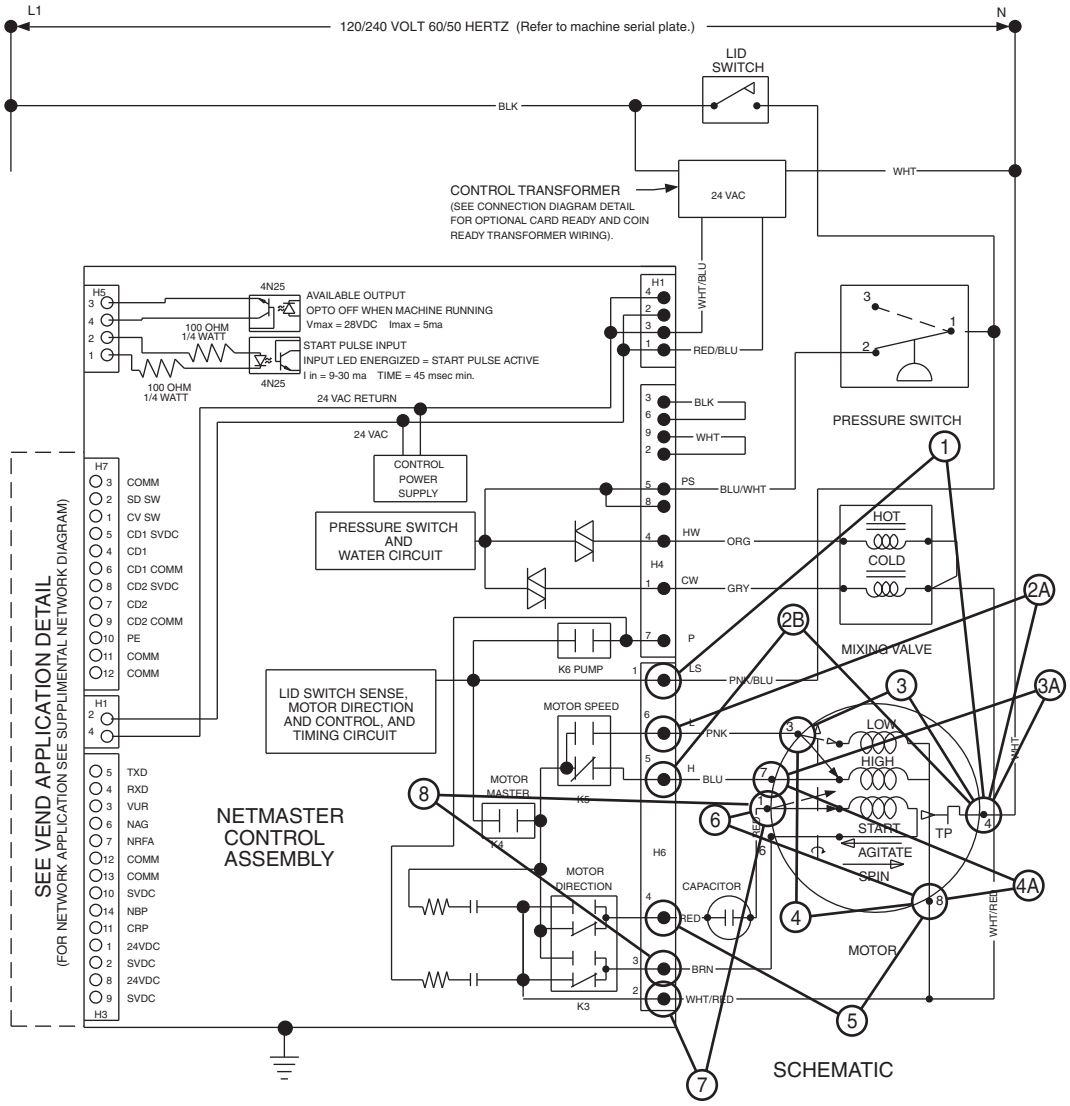

VEND APPLICATIONS DETAILS

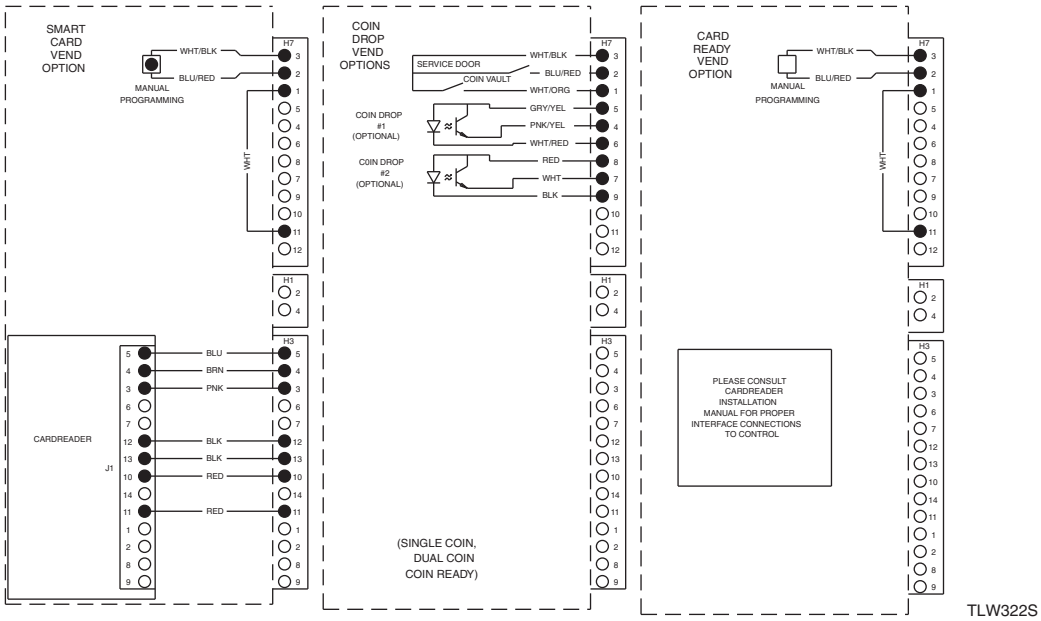

58. Washer Will Not Spin – High Speed

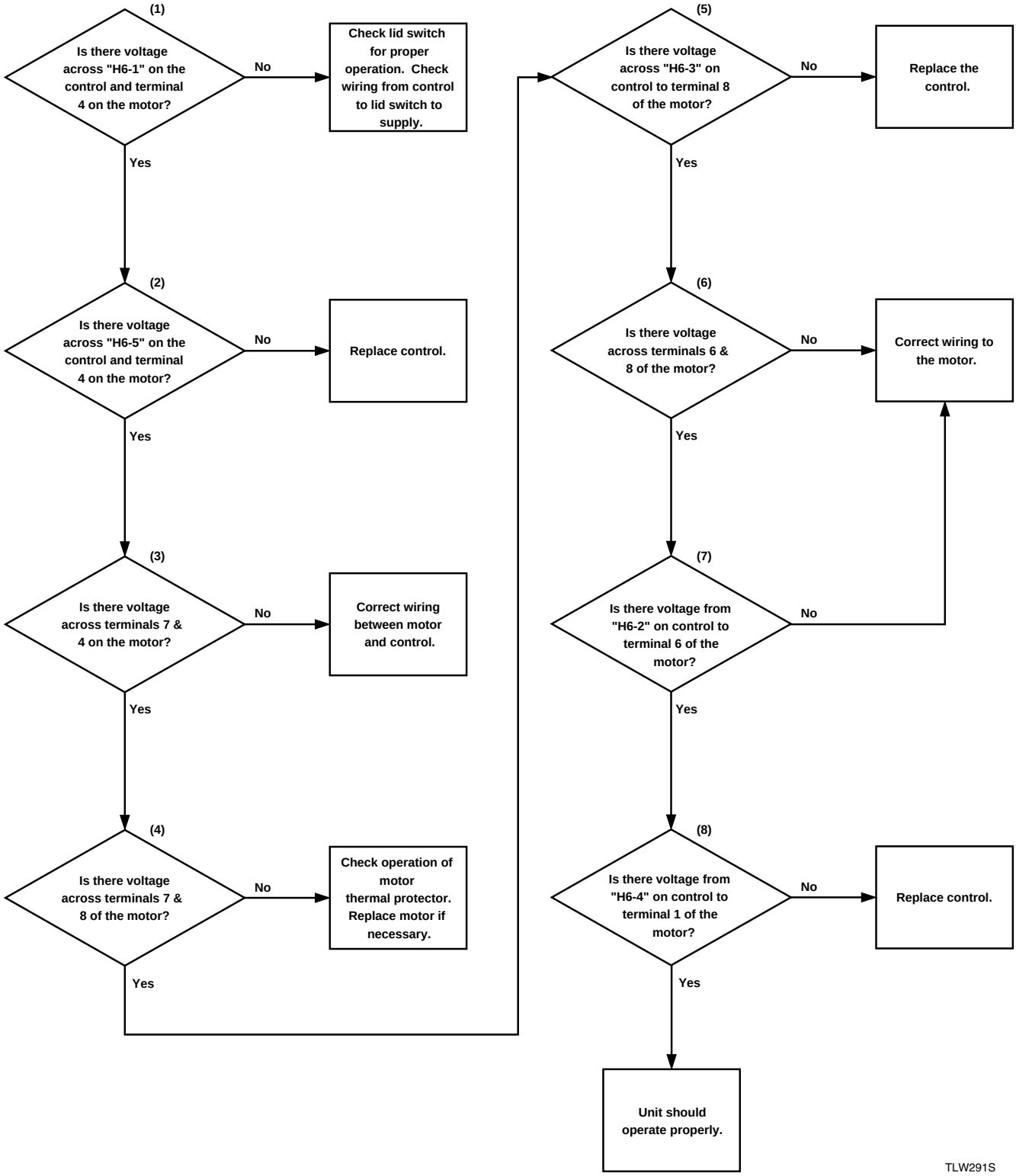

Washer Will Not Spin – High Speed

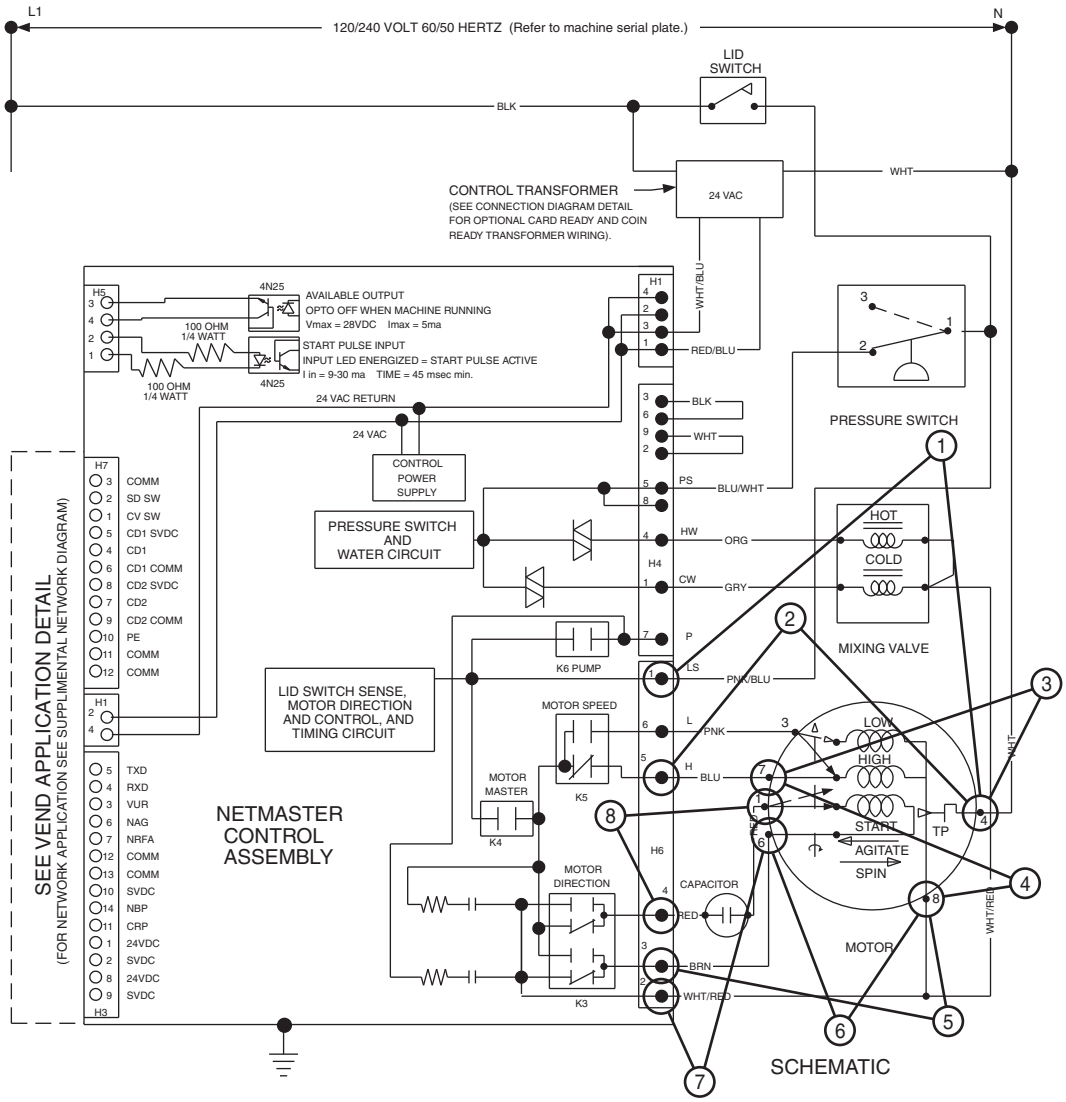

VEND APPLICATIONS DETAILS

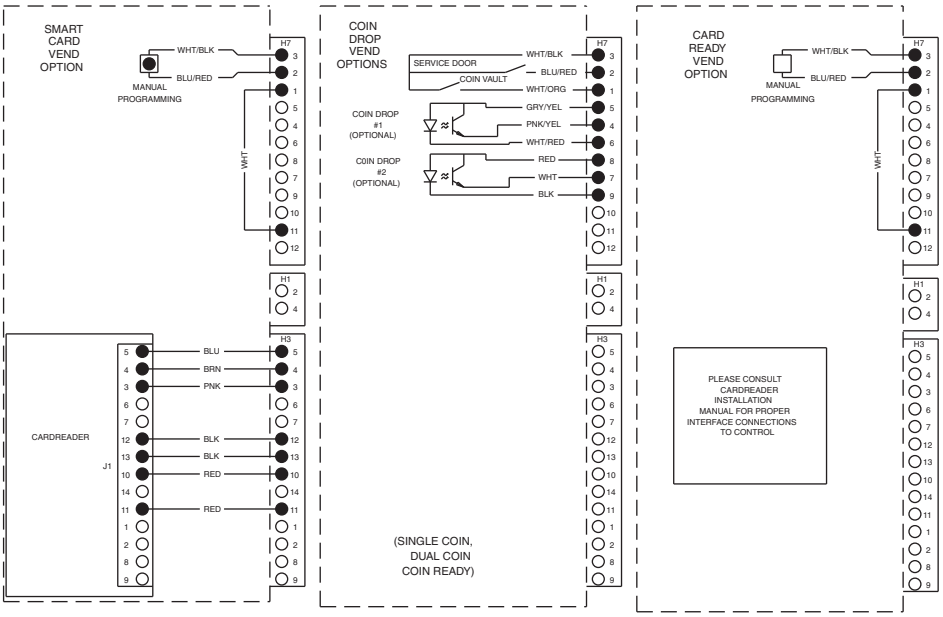

TLW323S

59. Washer Will Not Spin – Low Speed

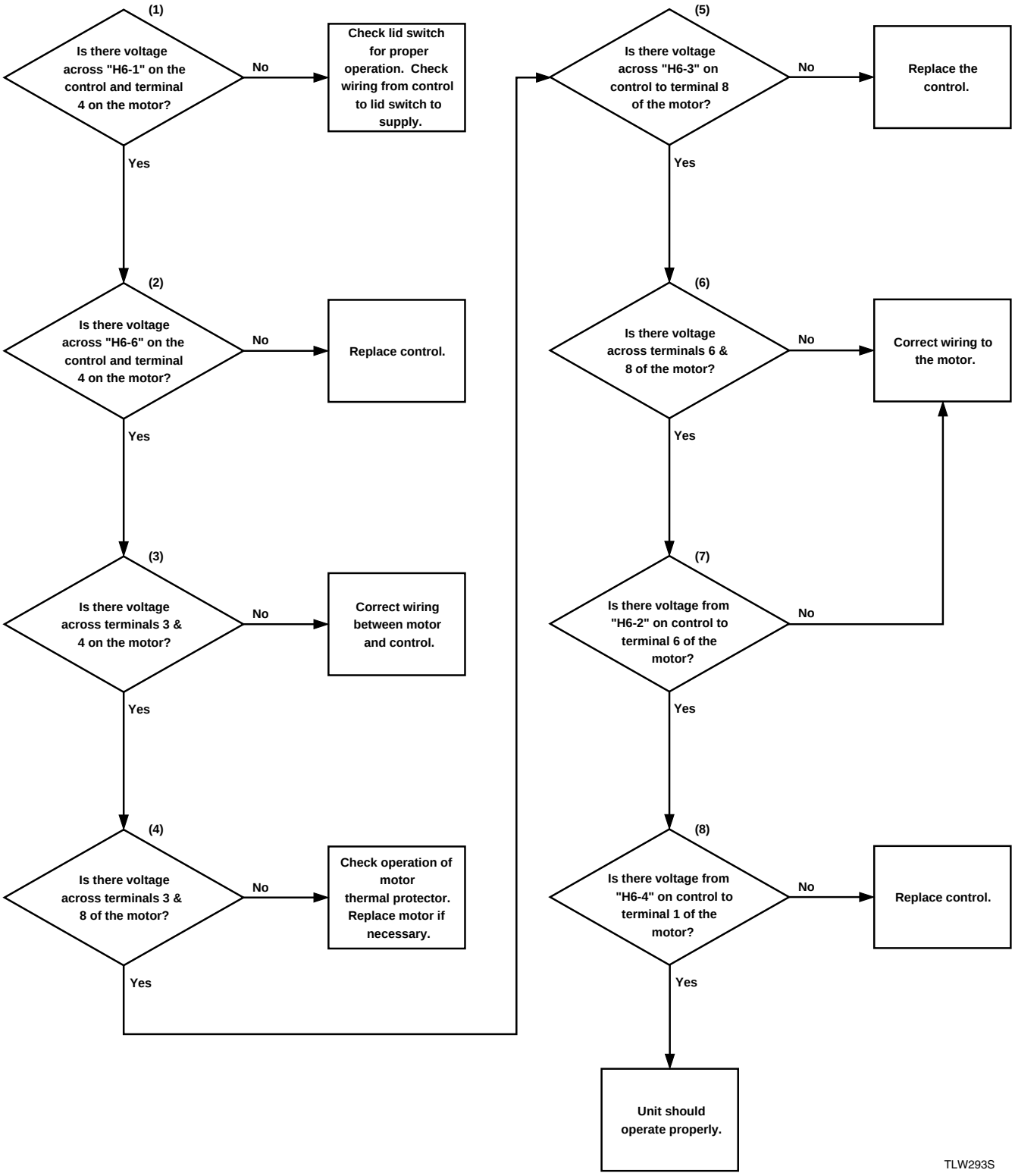

Washer Will Not Spin – Low Speed

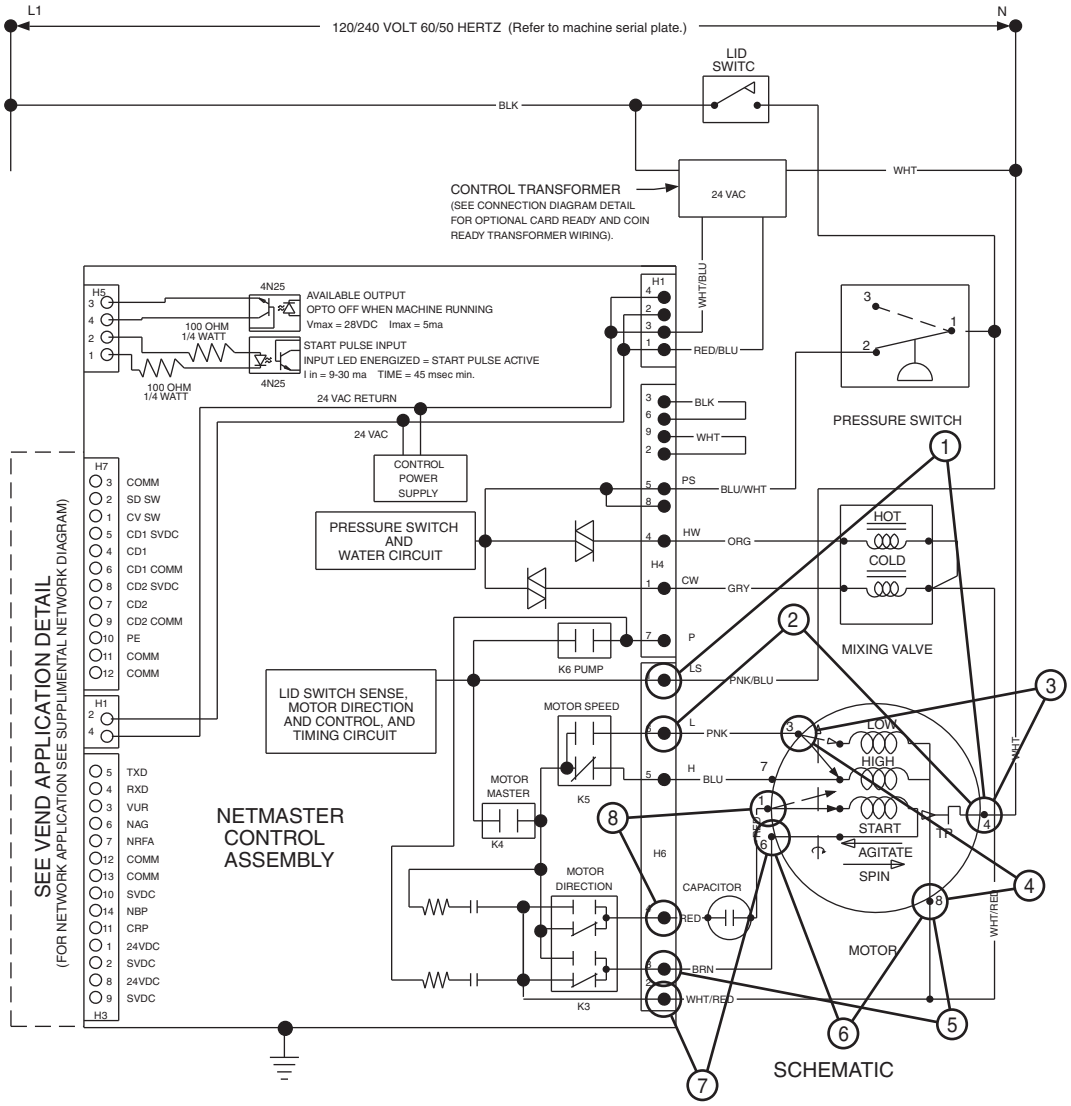

VEND APPLICATIONS DETAILS

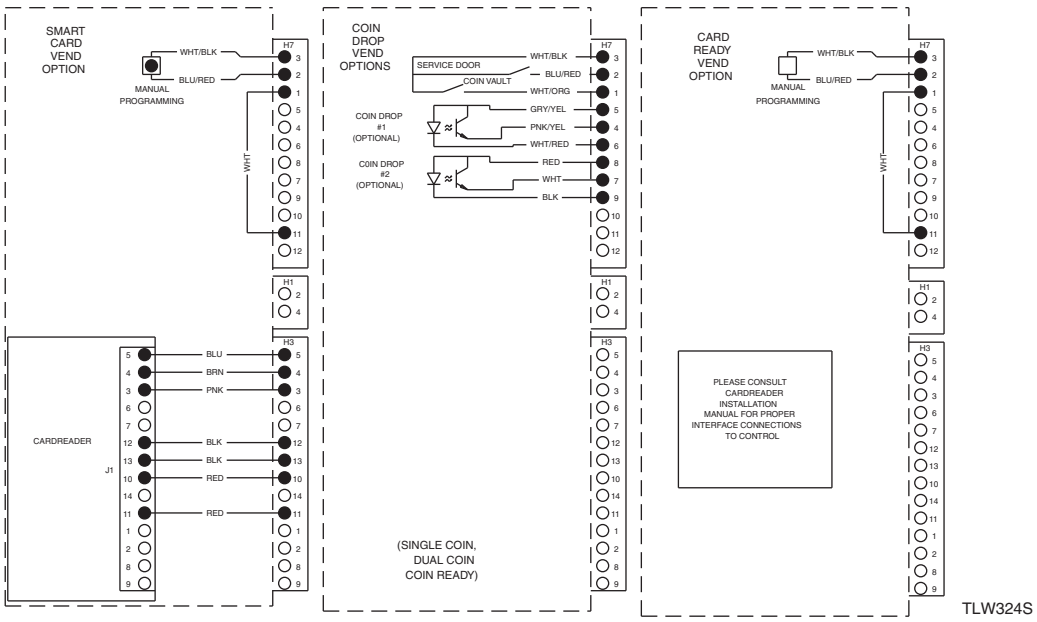

Section 4
Adjustments

WARNING

To reduce the risk of electric shock, fire, explosion, serious injury or death:
- **Disconnect electric power to the washer before servicing.**
- **Never start the washer with any guards/panels removed.**
- **Whenever ground wires are removed during servicing, these ground wires must be reconnected to ensure that the washer is properly grounded.**

W003

60. Leveling Legs

Refer to *Figure 10*.

a. Place rubber feet on all four leveling legs.
b. Place washer in position on a clean, dry, and reasonably firm floor.
c. Loosen locknuts and adjust two front leveling legs. Once adjusted, tilt washer forward on front legs and lower back down into position to set the rear self-leveling legs.
d. Washer must not rock. After washer is at desired height, tighten locknuts securely against bottom of washer base. If these locknuts are not tight, washer will not remain stationary during operation.

NOTE: Install rear extension leg kit, No. 566P3, (optional equipment at extra cost) to raise height of washer.

NOTE: Improper installation, installation on carpet or flexing of a weak floor will cause excessive vibration.

IMPORTANT: Do not slide washer across floor once leveling legs have been extended, as legs and base could become damaged.

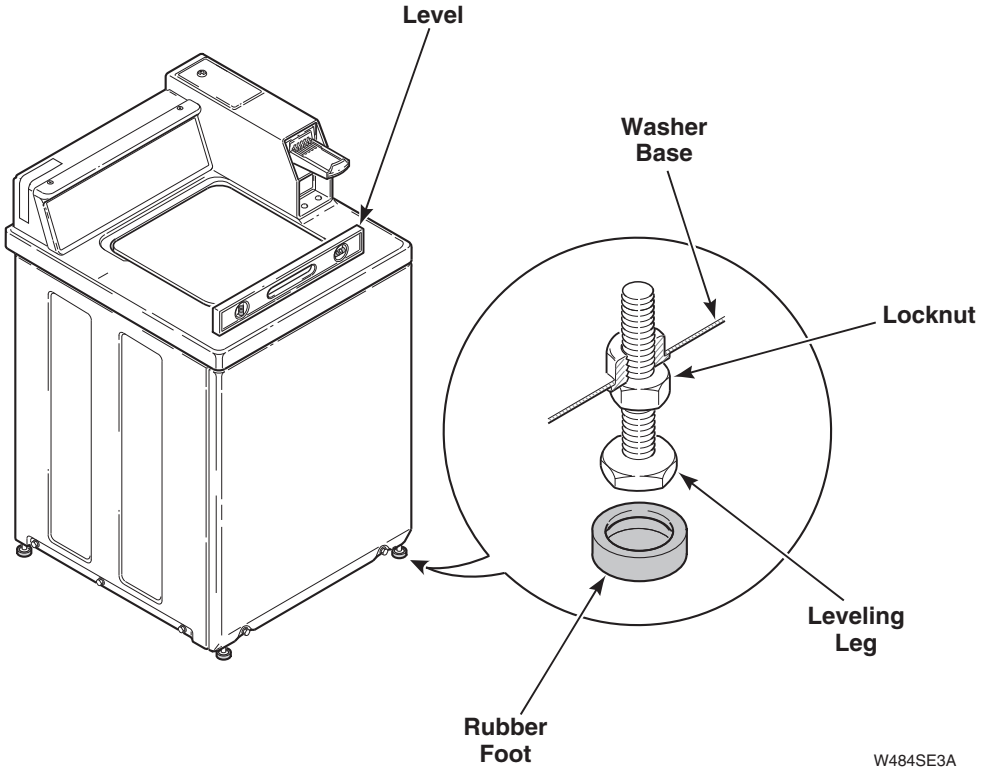

Figure 10

WARNING

To reduce the risk of electric shock, fire, explosion, serious injury or death:
- **Disconnect electric power to the washer before servicing.**
- **Never start the washer with any guards/panels removed.**
- **Whenever ground wires are removed during servicing, these ground wires must be reconnected to ensure that the washer is properly grounded.**

W003

61. Pressure Switch

Refer to *Figure 11*.

Most washers are equipped with a variable water level pressure switch (located inside the control hood) which allows the owner to adjust the water fill level height in the washtub from 10, 11 or 13 inches.

IMPORTANT: Water fill heights less than 10 inches are not recommended. When average to large size clothes loads are expected, damage to the clothes and/or the washer may result.

When the washer leaves the factory, the pressure switch is set for approximately 11 inches of water.

To adjust the pressure switch, proceed as follows:

WARNING

To reduce the risk of electric shock, disconnect the electrical power to the washer before attempting to service.

W094

a. Remove the two control panel attaching screws and lift the assembly up and out of the slots in the cabinet top.
b. Lay the control panel face down (on protective padding) on top of the washer.
c. Rotate the cam on the pressure switch **clockwise to lower** the water fill height, or **counterclockwise to raise** the height. Refer to *Figure 11*.

IMPORTANT: The cam has three settings. The setting on the left raises the water level to 10 inches. Middle setting raises the water level to 11 inches. The setting on the right raises the water level to 13 inches.

d. Carefully reinstall the control panel.
e. Reconnect the electrical power to the washer.
f. Run the washer through a cycle and observe the water fill level.

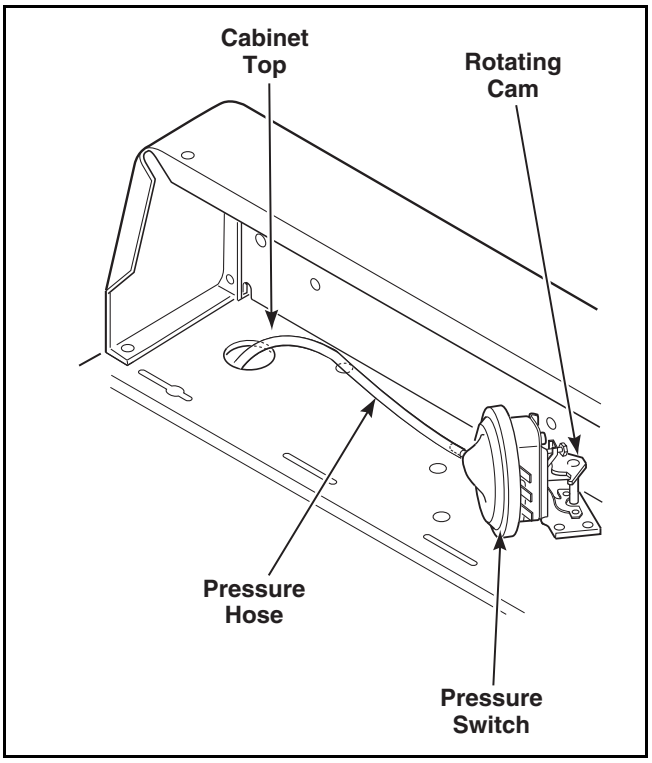

Figure 11

62. Belt (Agitate and Spin)

No belt adjustment is required.

63. Cleaning Non-Electronic Coin Drop

a. Disconnect electrical power to machine and drop.
b. Remove coin drop from machine.
c. If lint is preventing coins from rolling through coin drop, blow compressed air though coin entry and along the side of the coin drop. Refer to *Figure 12*.
d. Insert a coin through the coin drop. If coin does not roll through drop, continue with the following.

WARNING

To reduce the risk of electric shock, fire, explosion, serious injury or death:
- **Disconnect electric power to the washer before servicing.**
- **Never start the washer with any guards/panels removed.**
- **Whenever ground wires are removed during servicing, these ground wires must be reconnected to ensure that the washer is properly grounded.**

W003

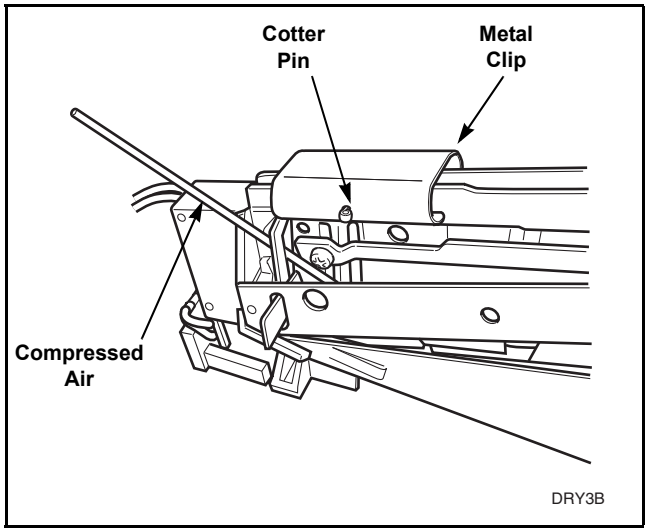

Figure 12

e. Remove cotter pin from top of drop. Refer to *Figure 12*. Save pin for reinstallation when cleaning is complete.
f. Move metal clip closer to sensor so that it comes off frame. Refer to *Figure 12*.
g. Remove coin return from coin drop frame. Refer to *Figure 13*.

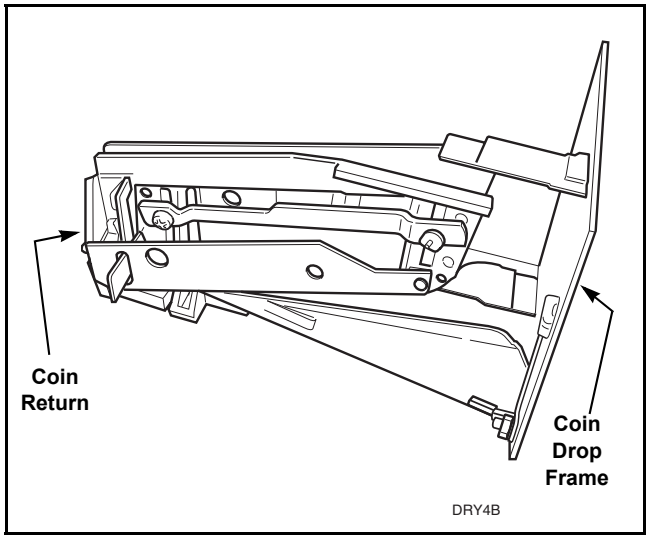

Figure 13

h. Check coin path in coin drop for lint and residue. If lint or light residues are present, use a cotton swab to remove. If heavy residue is present, it may be necessary to first scrape off excessive residue and then use a cotton swab dipped in water or isopropyl alcohol (rubbing alcohol) to remove remainder of residue. Refer to *Figure 14*.

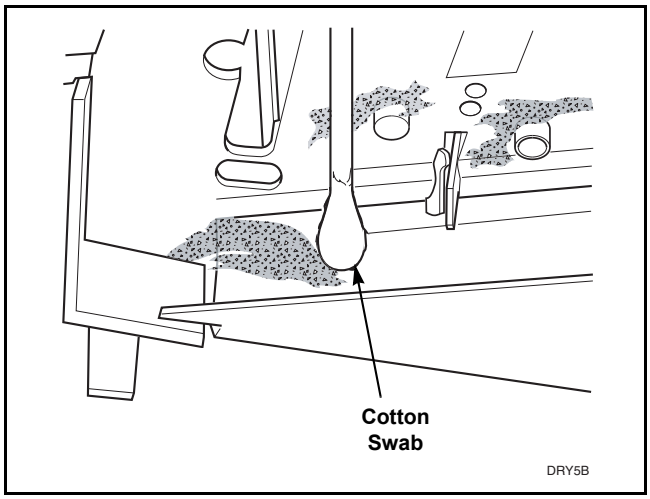

Figure 14

i. Check coin return pendulum to verify it swings freely. If pendulum does not swing freely, spray pendulum pivot point with Teflon based lubricant and move pendulum back and forth two to three times. An additional application of Teflon based lubricant may be necessary to ensure that pendulum swings freely. Refer to *Figure 15*.
j. Check coin drop sensor for dust or dirt on eyes. Wipe eyes with dry cotton swab. Refer to *Figure 16*.

WARNING

To reduce the risk of electric shock, fire, explosion, serious injury or death:
- **Disconnect electric power to the washer before servicing.**
- **Never start the washer with any guards/panels removed.**
- **Whenever ground wires are removed during servicing, these ground wires must be reconnected to ensure that the washer is properly grounded.**

W003

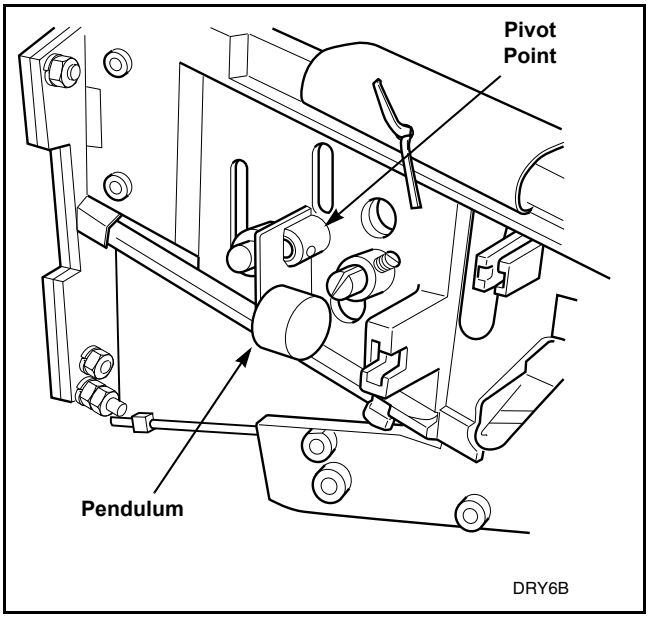

Figure 15

IMPORTANT: DO NOT use isopropyl alcohol to clean electronic sensor or eyes.

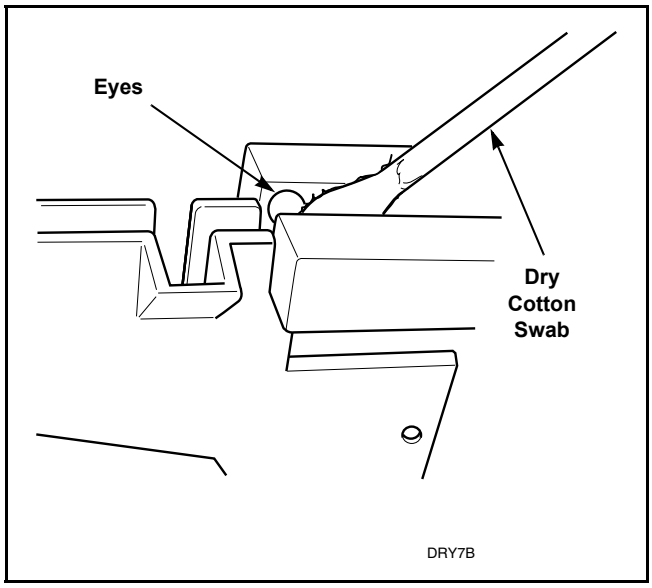

Figure 16

k. Reinstall coin return on to coin drop frame.
l. Reinstall metal clip and slide towards coin insert slot. All cotter pin holes must line up.
m. Reinstall cotter pin.
n. Place drop on level surface to verify that coins follow correct path in drop. It may be necessary to lift drop to allow coin to follow through sensor.
o. Reinstall coin drop into machine.
p. Reconnect electrical power to machine and drop.
q. Add a coin to drop to verify that coin drop is operating properly and that electrical connection is working properly.

NOTE: If coin drop does not operate properly after above steps have been completed, corrosion of metal or vandalized components within coin drop may be preventing the coin drop from functioning correctly. Replace coin drop.

64. Cleaning Electronic Coin Drop

NOTE: The electronic coin drop should be cleaned once a year. Clean the drop more often if it is exposed to high levels of residue or lint build-up.

a. Disconnect electrical power to machine and drop.
b. Remove coin drop from machine.
c. Move spring downward until cover catch is free. Refer to *Figure 17*.

WARNING

To reduce the risk of electric shock, fire, explosion, serious injury or death:
- **Disconnect electric power to the washer before servicing.**
- **Never start the washer with any guards/panels removed.**
- **Whenever ground wires are removed during servicing, these ground wires must be reconnected to ensure that the washer is properly grounded.**

W003

NOTE: Do not lift or overbend the spring in any direction.

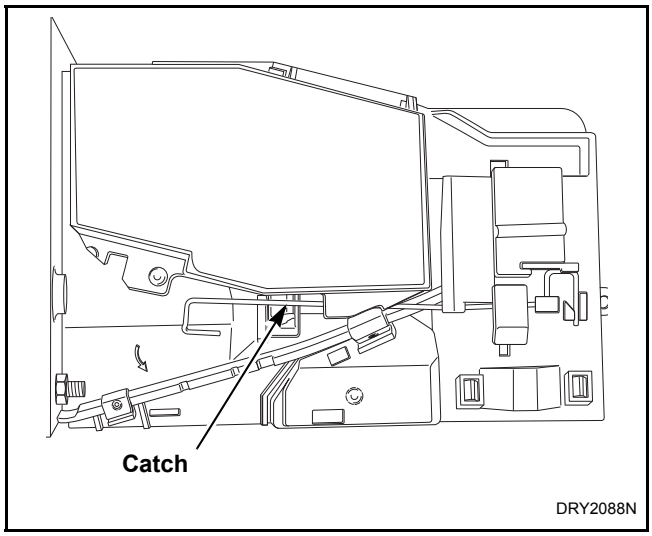

Figure 17

d. Open cover for coin drop. Refer to *Figure 18*.

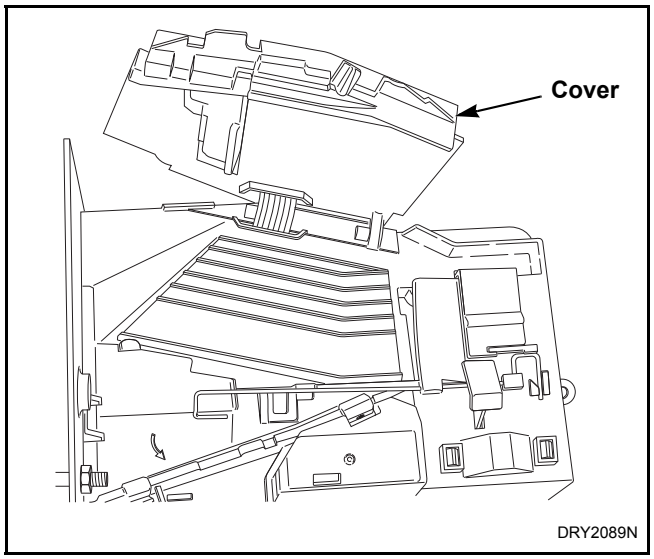

Figure 18

e. Clean the coin path with a soft brush and wipe exposed surfaces with an alcohol moistened cloth. Refer to *Figure 19*.

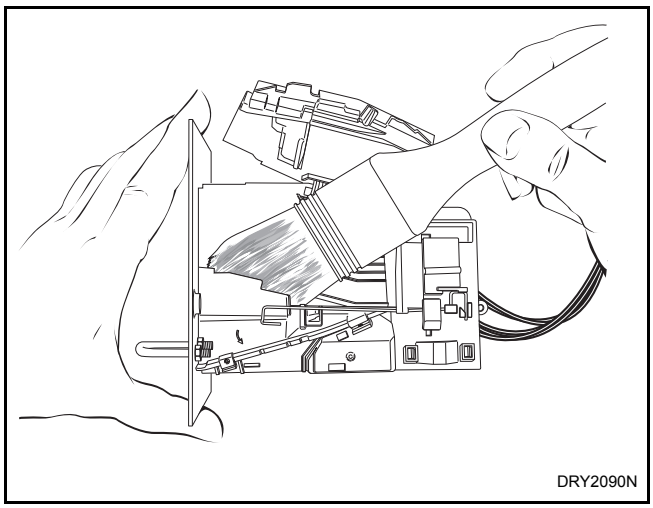

Figure 19

f. Clean residue from coin rail with an alcohol moistened cloth. Refer to *Figure 20*.

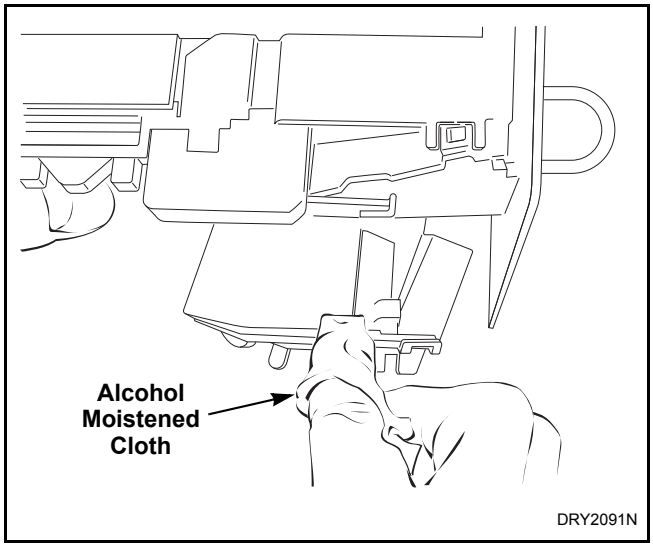

Figure 20

WARNING

To reduce the risk of electric shock, fire, explosion, serious injury or death:
- **Disconnect electric power to the washer before servicing.**
- **Never start the washer with any guards/panels removed.**
- **Whenever ground wires are removed during servicing, these ground wires must be reconnected to ensure that the washer is properly grounded.**

W003

g. Clean light sensors with a soft brush or air spray duster. Refer to *Figure 21*.

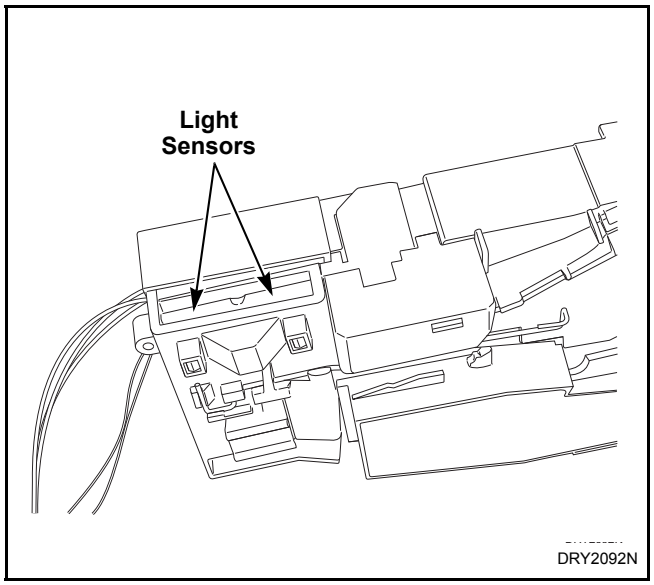

Figure 21

h. Close cover for coin drop.
i. Move spring back over cover catch.
j. Reinstall coin drop into machine.
k. Reconnect electrical power to machine and drop.
l. Add a coin to drop to verify that coin drop is operating properly and that electrical connection is working properly.

Section 5
Motor Test Procedure

WARNING

To reduce the risk of electric shock, fire, explosion, serious injury or death:
- **Disconnect electric power to the washer before servicing.**
- **Never start the washer with any guards/panels removed.**
- **Whenever ground wires are removed during servicing, these ground wires must be reconnected to ensure that the washer is properly grounded.**

W003

IMPORTANT: Disconnect base wire harness plug from motor.

WARNING

Disconnect electric power to washer before performing the following steps:

W188

Motor test procedures using an Ohm meter.

NOTE: Resistance readings slightly out of given ranges may be due to meter conditions. These readings DO NOT necessarily indicate motor failure.

	Meter Connections	Reading Should Be	If Not
6.	Ground to Each Other Terminal	Open	Terminal shorted to ground.
7.	White to Yellow	Closed	Open thermal overload.
8.	Red to Brown	2-8 Ohms	Start winding open or resistance too high or too low.
9.	Blue to White	1-2 Ohms	High speed winding (4 pole) open or resistance too high or too low.
10.	Violet to White (2-speed motor)	2.5 Ohms (approximate)	Low winding open; High speed winding open; or resistance too high or too low.
11.	“R” to Red	Closed	Open start (auxiliary) switch.
12.	“P” to Blue (2-speed motor)	Closed	Open start switch 4 pole winding

NOTE: Steps 8, 9 and 10 are with motor centrifugal mechanism in the run position.

13.	“R” to Red	Open	Start auxiliary switch.
14.	“P” to Blue (2-speed motor)	3 Ohms (approximate)	Refer to Blue to White and Violet to White.
15.	“P” to Violet (2-speed motor)	Closed	Open low (6 pole) winding run switch.

Notes

Section 6
Cycle Sequence Charts

FUNCTION		IN USE LIGHT	RINSE LIGHT	SPIN LIGHT	WATER TEMP.	CYCLE & MOTOR SPEED*	TIME (Min. & Sec.)
WASH	WASH, FILL OR AGITATE	X			H, W, C	N = FAST PP = FAST D = SLOW	10:33
PAUSE		X					:05
SPIN	SPIN	X		X		N = FAST PP = FAST D = SLOW	1:56
	SPIN AND SPRAY	X		X	COLD	N = FAST PP = FAST D = SLOW	:31
	SPIN	X		X		N = FAST PP = FAST D = SLOW	:36
	SPIN AND SPRAY	X		X	COLD	N = FAST PP = FAST D = SLOW	:07
	SPIN	X		X		N = FAST PP = FAST D = SLOW	1:07
PAUSE		X					:04
RINSE	RINSE FILL (Timer Motor Runs)	X	X		COLD		:36
	PAUSE OR FILL	X	X		COLD		:02
	RINSE, AGITATE OR FILL	X	X		COLD	N = FAST PP = FAST D = SLOW	3:03
PAUSE		X					:06
SPIN	SPIN	X		X		N = FAST PP = FAST D = SLOW	10:32
TIMER MOTOR RUNS OUT							:42
						TOTAL	30:00

*On single speed models, all speeds are fast.

KEY:

H = HOT — **PP = PERMANENT PRESS CYCLE**
W = WARM — **D = DELICATE CYCLE**
C = COLD — **X = INDICATOR LIGHT GLOWS**
N = NORMAL CYCLE

Timer No. 28716P and 28719 Cycle Sequence

FUNCTION		IN USE LIGHT	RINSE LIGHT	SPIN LIGHT	WATER TEMP.	CYCLE & MOTOR SPEED*	EATON TIME (Min. & Sec.)	MALLORY TIME (Min. & Sec.)
WASH	COIN SLIDE STARTING STROKE 17.82º (Mallory) 16.84º (Eaton)	X			H, W, C	N = FAST PP = FAST D = SLOW	:57	1:00
	AGITATE OR VARIABLE FILL	X			H, W, C	N = FAST PP = FAST D = SLOW	7:00	7:00
PAUSE		X					:21	:21
SPIN	SPIN	X				N = FAST PP = FAST D = SLOW	1:25	1:25
	SPIN AND SPRAY	X			COLD	N = FAST PP = FAST D = SLOW	:45	:45
	SPIN	X				N = FAST PP = FAST D = SLOW	1:15	1:15
PAUSE		X					:04	:04
RINSE	FILL (Timer Motor Runs)	X			COLD		:13	:19
	PAUSE OR FILL	X	X		COLD		:13	:13
	AGITATE OR VARIABLE FILL	X	X		COLD	N = FAST PP = FAST D = SLOW	1:01	:54
		X					:09	:16
PAUSE		X					:14	:16
		X		X			:06	:03
SPIN	SPIN	X		X		N = FAST PP = FAST D = SLOW	6:00	6:00
PAUSE		X		X			:04	:08
		X					:06	:03
OFF							:22	:19
						TOTAL	20:17	20:21

*On single speed models, all speeds are fast.

KEY:

H = HOT — **PP = PERMANENT PRESS CYCLE**
W = WARM — **D = DELICATE CYCLE**
C = COLD — **X = INDICATOR LIGHT GLOWS**
N = NORMAL CYCLE

Timer No. 31111P, 31504P and 35368P Cycle Sequence

FUNCTION		IN USE LIGHT	RINSE LIGHT	SPIN LIGHT	WATER TEMP.	CYCLE & MOTOR SPEED*	EATON TIME (Min. & Sec.)
WASH	COIN SLIDE STARTING STROKE 16.84°	X			H, W, C	FAST OR SLOW	:57
	WASH, FILL OR AGITATE	X			H, W, C	FAST OR SLOW	7:00
PAUSE		X					:21
SPIN	SPIN	X				FAST OR SLOW	1:25
	SPIN AND SPRAY	X			COLD	FAST OR SLOW	:45
	SPIN	X				FAST OR SLOW	1:15
PAUSE		X					:04
RINSE	FILL (Timer Motor Runs)	X			COLD		:13
	PAUSE OR FILL	X	X		COLD		:13
	AGITATE OR VARIABLE FILL	X	X		COLD	FAST OR SLOW	1:01
		X					:09
PAUSE		X					:16
		X		X			:06
SPIN	SPIN	X		X		FAST	6:00
PAUSE		X		X			:04
		X					:10
OFF	PART OF INTENDED COIN SLIDE START STROKE 6.48°						:18
						TOTAL	20:17

*On single speed models, all speeds are fast.

KEY:

H = HOT
W = WARM
C = COLD
X = INDICATOR LIGHT GLOWS

Timer No. 36986 Cycle Sequence

FUNCTION		IN USE LIGHT	RINSE LIGHT	SPIN LIGHT	WATER TEMP.	CYCLE & MOTOR SPEED*	TIME (Min. & Sec.)
WASH	COIN SLIDE STARTING STROKE 16.84º (Eaton)	X			H, W, C	N = FAST PP = FAST D = SLOW	1:23
	AGITATE OR VARIABLE FILL	X			H, W, C	N = FAST PP = FAST D = SLOW	10:00
PAUSE		X					:34
SPIN	SPIN	X				N = FAST PP = FAST D = SLOW	1:32
	SPIN AND SPRAY	X			COLD	N = FAST PP = FAST D = SLOW	:30
	SPIN	X				N = FAST PP = FAST D = SLOW	1:29
PAUSE		X					:06
RINSE	FILL (Timer Motor Runs)	X			COLD		:06
	PAUSE OR FILL	X	X		COLD		:20
	AGITATE OR VARIABLE FILL		X		COLD	N = FAST PP = FAST D = SLOW	3:19
		X					:24
PAUSE		X					:24
		X		X			:10
SPIN	SPIN	X		X		N = FAST PP = FAST D = SLOW	8:30
PAUSE		X		X			:06
		X					:13
OFF							:32
						TOTAL	29:39

*On single speed models, all speeds are fast.

KEY:

H = HOT **PP = PERMANENT PRESS CYCLE**
W = WARM **D = DELICATE CYCLE**
C = COLD **X = INDICATOR LIGHT GLOWS**
N = NORMAL CYCLE

Timer No. 34601P, 34603P, 34604 and 36987 Cycle Sequence

FUNCTION		IN USE LIGHT	RINSE LIGHT	SPIN LIGHT	WATER TEMP.	CYCLE & MOTOR SPEED*	EATON TIME (Min. & Sec.)	MALLORY TIME (Min. & Sec.)
WASH	COIN SLIDE STARTING STROKE 17.82º (Mallory) 16.84º (Eaton)	X			H, W, C	N = FAST PP = FAST D = SLOW	1:23	1:31
	AGITATE OR VARIABLE FILL	X			H, W, C	N = FAST PP = FAST D = SLOW	10:00	10:00
PAUSE		X					:34	:34
SPIN	SPIN	X				N = FAST PP = FAST D = SLOW	1:32	1:32
	SPIN AND SPRAY	X			COLD	N = FAST PP = FAST D = SLOW	:30	:30
	SPIN	X				N = FAST PP = FAST D = SLOW	1:29	1:30
PAUSE		X					:06	:06
RINSE	FILL (Timer Motor Runs)	X			COLD		:06	:34
	PAUSE OR FILL	X	X		COLD		:20	:20
	AGITATE OR VARIABLE FILL	X	X		COLD	N = FAST PP = FAST D = SLOW	3:19	3:20
		X					:24	:23
PAUSE		X					:24	:25
		X		X			:10	:11
SPIN	SPIN	X		X		N = FAST PP = FAST D = SLOW	8:30	8:30
PAUSE		X		X			:06	:18
		X					:13	:05
OFF							:32	:28
						TOTAL	29:39	30:17

*On single speed models, all speeds are fast.

KEY:

H = HOT **PP = PERMANENT PRESS CYCLE**
W = WARM **D = DELICATE CYCLE**
C = COLD **X = INDICATOR LIGHT GLOWS**
N = NORMAL CYCLE

Timer No. 34602P Cycle Sequence

FUNCTION		IN USE LIGHT	RINSE LIGHT	SPIN LIGHT	WATER TEMP.	CYCLE & MOTOR SPEED*	TIME (Min. & Sec.)
WASH		X			H, W, C	N = FAST PP = FAST D = SLOW	7:95
PAUSE		X					:35
SPIN	SPIN	X				N = FAST PP = FAST D = SLOW	:40
PAUSE		X					:07
RINSE	FILL (Timer Motor Runs)	X			COLD		:22
	PAUSE OR FILL	X	X		COLD		:22
	AGITATE OR VARIABLE FILL		X		COLD	N = FAST PP = FAST D = SLOW	1:79
		X					:15
PAUSE		X					:36
SPIN	SPIN	X				N = FAST PP = FAST D = SLOW	:50
	RINSE, FILL AND SPIN	X				N = FAST PP = FAST D = SLOW	:50
	FINAL SPIN	X		X		N = FAST PP = FAST D = SLOW	7:24
PAUSE		X		X			:06
		X					:17
OFF							:30
						TOTAL	20:28

*On single speed models, all speeds are fast.

KEY:

H = HOT **PP = PERMANENT PRESS CYCLE**
W = WARM **D = DELICATE CYCLE**
C = COLD **X = INDICATOR LIGHT GLOWS**
N = NORMAL CYCLE

Timer No. 200914 Cycle Sequence

FUNCTION		IN USE LIGHT	RINSE LIGHT	SPIN LIGHT	WATER TEMP.	CYCLE & MOTOR SPEED*	TIME (Min. & Sec.)
WASH	COIN SLIDE STARTING STROKE 16.84º	X			H, W, C	N = FAST PP = FAST D = SLOW	1:23
	WASH FILL OR AGITATE	X			H, W, C	N = FAST PP = FAST D = SLOW	10:00
PAUSE		X					:26
SPIN	SPIN	X				N = FAST PP = FAST D = SLOW	:24
PAUSE		X					:04
RINSE	FILL (Timer Motor Runs)	X			COLD		:13
	PAUSE OR FILL	X	X		COLD		:13
	RINSE FILL OR AGITATE		X		COLD	N = FAST PP = FAST D = SLOW	2:44
	AGITATE OR VARIABLE FILL	X	X		COLD	N = FAST PP = FAST D = SLOW	:09
PAUSE		X					:26
SPIN	SPIN	X				N = FAST PP = FAST D = SLOW	:30
	SPRAY AND SPIN	X			COLD	N = FAST PP = FAST D = SLOW	:30
	FINAL SPIN	X		X		FAST	8:30
PAUSE		X					:14
OFF	PART OF INTENDED COIN SLIDE START STROKE 6.48°						:20
						TOTAL	24:43

*On single speed models, all speeds are fast.

KEY:

H = HOT **PP = PERMANENT PRESS CYCLE**
W = WARM **D = DELICATE CYCLE**
C = COLD **X = INDICATOR LIGHT GLOWS**
N = NORMAL CYCLE

Timer No. 201066 Cycle Sequence

		LIGHTS					TIME (Minutes and Seconds)			
FUNCTION		IN USE	RINSE	SPIN	WATER TEMP.	CYCLE & MOTOR SPEED *	LONG CYCLE (Energy Saving)	LONG CYCLE (Normal)	SHORT CYCLE (Energy Saving)	SHORT CYCLE (Normal)
WASH	FILL	X			H, W, C		2:00	2:00	2:00	2:00
WASH	AGITATE	X				N = FAST PP = FAST D = SLOW	N = 10:00 PP = 9:00 D = 8:00	N = 10:00 PP = 9:00 D = 8:00	N = 5:00 PP = 4:00 D = 3:00	N = 5:00 PP = 4:00 D = 3:00
PAUSE		X					:10	:10	:10	:10
SPIN	SPIN	X				N = FAST PP & D = SLOW (Normal) FAST (Energy Saving)	:34	N = :30 PP = 1:00 D = 1:00	:34	N = :30 PP = 1:00 D = 1:00
SPIN	SPIN AND SPRAY	X			C	N = FAST PP = SLOW D = SLOW	:00	:30	:00	:30
SPIN	SPIN	X				N = FAST PP = SLOW D = SLOW	:00	N = 2:30 PP = 2:00 D = 2:00	:00	N = 2:30 PP = 2:00 D = 2:00
RINSE	FILL	X	X		C		2:00	2:00	2:00	2:00
RINSE	AGITATE	X	X			N = FAST PP = FAST D = SLOW	5:00	5:00	2:00	2:00
PAUSE		X					:10	:10	:10	:10
SPIN	SPIN	X		X		FAST	:30	1:30	:30	1:30
SPIN	SPIN AND SPRAY	X		X	C	FAST	:30	:00	:30	:00
SPIN	FINAL SPIN	X		X		FAST	7:00	7:00	5:00	5:00
						TOTAL	N = 27:54 PP = 26:54 D = 25:54	N = 31:20 PP = 30:20 D = 29:20	N = 17:54 PP = 16:54 D = 15:54	N = 21:20 PP = 20:20 D = 19:20

*On single speed models, all speeds are fast.

KEY:

H = HOT — **PP = PERMANENT PRESS CYCLE**
W = WARM — **D = DELICATE CYCLE**
C = COLD — **X = INDICATOR LIGHT GLOWS**
N = NORMAL CYCLE

Cycle Sequence For Coin Slide Operated and Non-Metered Models With “8”, “9”, “M” or “S” in the 4th Character of the Model Number