Maytag DE19CD 03 - FRONT PANEL & DOOR ASSEMBLY

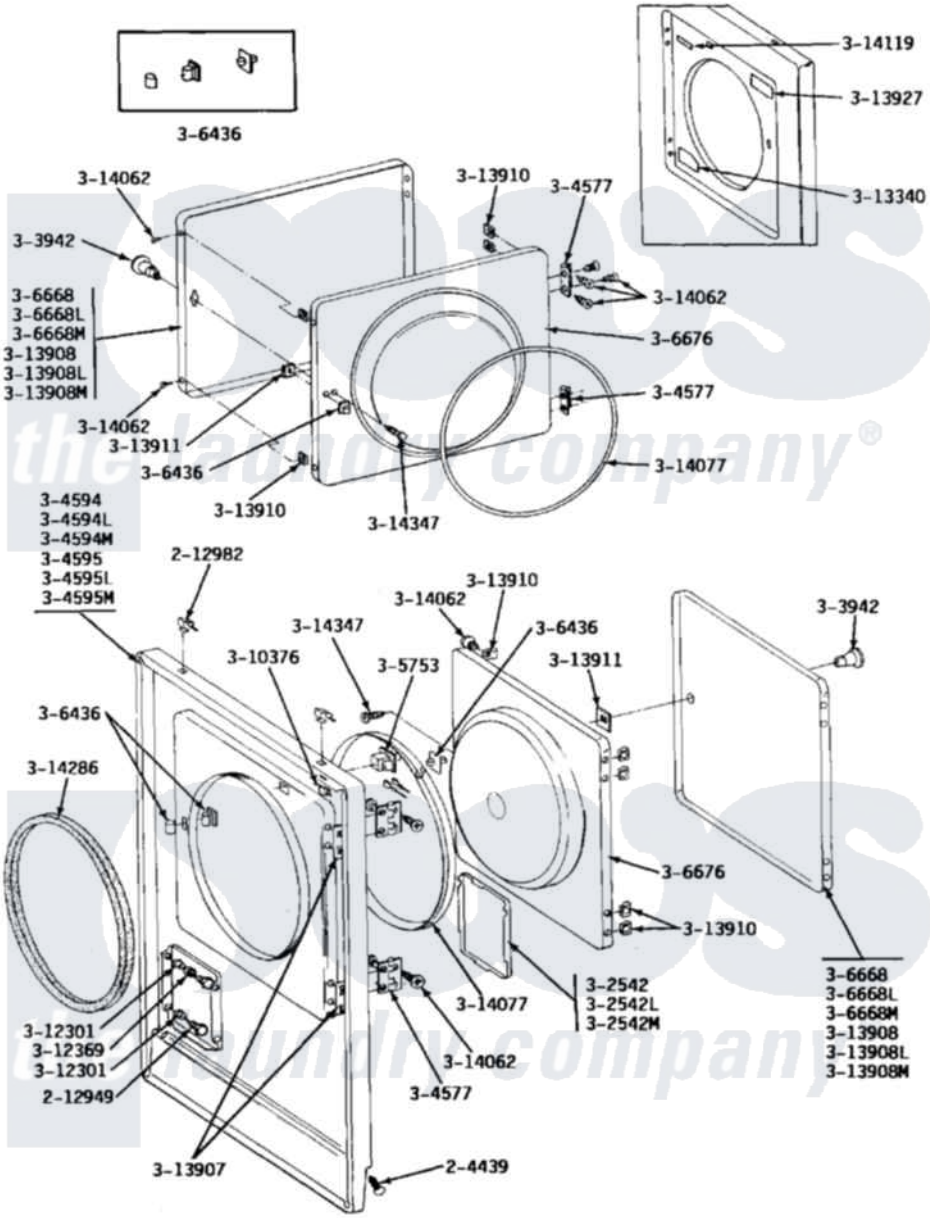

Maytag Commercial Maytag DE19CD Dryer Parts Parts Diagram 03 - FRONT PANEL & DOOR ASSEMBLY
Click on the part number to view part

Item	Original Part Number	Replaced By	Status	Part Description
001	204439			Screw And Fstner Assembly
002	212949	22001866		Screw, Relay
003	212982	22001650		Fastener, Spring
004	NLA		Not Available	ACCESS DOOR (WHITE)
005	NLA		Not Available	ACCESS DOOR-ALMOND
006	NLA		Not Available	ACCESS DOOR-HARVEST WHEAT
007	NLA		Not Available	KNOB AND SCREW
011	NLA		Not Available	FRONT PANEL-WHITE
012	NLA		Not Available	FRONT PANEL-ALMOND
013	NLA		Not Available	FRONT PANEL-HARVEST WHEAT
014	Y304577	33001230		Hinge, Door
015	Y305753	W10169313		Switch-Dor
016	306436			Door Latch Kit--W
017	Y306668			DOOR (WHT)
018	NLA		Not Available	DOOR-ALMOND

019	NLA	Not Available	DOOR-HARVEST WHEAT
020	NLA	Not Available	INNER DOOR WITH KNOB
021	Y310376		Clip, Door Switch Harness
022	NLA	Not Available	BUSHING FOR ACCESS STUD
023	312369		Sleeve, Access Panel Stud Part Not Used
024	Y313340		LABEL, LINT SCREEN INSTRUCTION
025	Y313907		Fastener, Twin
026	Y313908		DOOR PANEL-WHITE
027	NLA	Not Available	DOOR PANEL-ALMOND
028	NLA	Not Available	DOOR PANEL-HARVEST WHEAT
029	Y313910		Clip, Door Liner To Outer Panel
030	Y313911		Door Strike Retainer
031	Y313927		INSTRUCTION LABEL
032	Y314062		Screw, Door Hinge And Panel
033	314077		Door Seal
034	NLA	Not Available	GAS IGNITION LABEL
035	314286		Seal For Front Panel
036	NLA	Not Available	SCREW FOR DOOR KNOB----NA

the laundry company®
the laundry company®