Maytag DG18CA 07 - FRONT PANEL-REAR VIEW

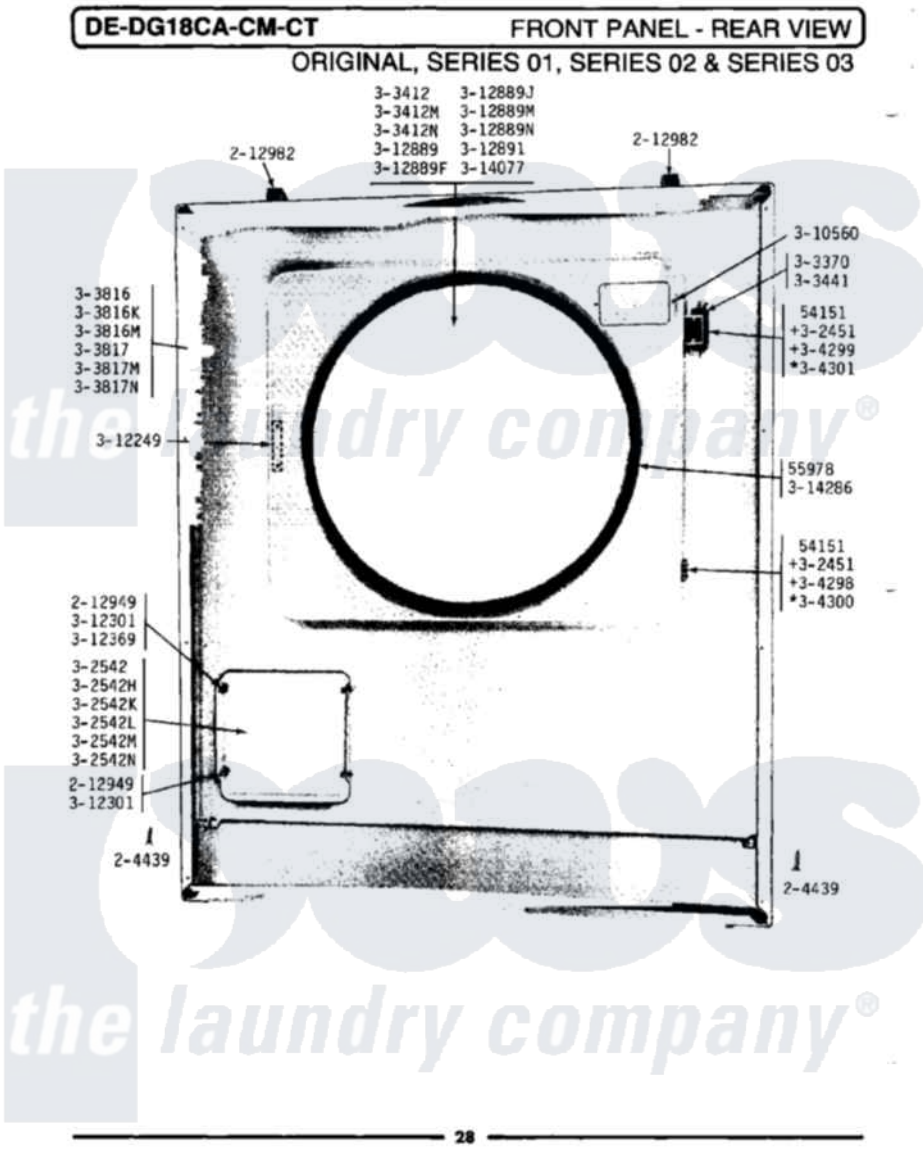

Maytag Commercial Maytag DG18CA Dryer Parts Parts Diagram 07 - FRONT PANEL-REAR VIEW
Click on the part number to view part

Item	Original Part Number	Replaced By	Status	Part Description
001	NLA		Not Available	SCREW, No.4-40 X 1/4
002	Y055978			Rubber Adhesive, 2 Oz Tube
003	204439			Screw And Fstner Assembly
004	212949	22001866		Screw, Relay
005	212982	22001650		Fastener, Spring
006	NLA		Not Available	HINGE ASSEMBLY----N
007	NLA		Not Available	ACCESS DOOR (WHITE)
008	NLA		Not Available	ACCESS DOOR-ALMOND
009	NLA		Not Available	ACCESS DOOR-HARVEST WHEAT
010	NLA		Not Available	DOOR COMPLETE-WHITE
011	NLA		Not Available	DOOR COMPLETE-HARVEST WHEAT
012	NLA		Not Available	FRONT PANEL-WHITE
013	NLA		Not Available	FRONT PANEL-HARVEST WHEAT
014	Y304298			Hinge - Lower

015	NLA		Not Available	HINGE - UPPER
016	NLA		Not Available	HINGE - LOWER
017	NLA		Not Available	HINGE - UPPER
018	310560	74004005		Screw, 6-32 X 5/16"
019	NLA		Not Available	STRIKE PLATE
020	NLA		Not Available	BUSHING FOR ACCESS STUD
021	312369			Sleeve, Access Panel Stud Part Not Used
022	NLA		Not Available	DOOR PANEL-WHITE
023	NLA		Not Available	DOOR PANEL-HAVEST WHEAT
024	Y312891		Not Available	DOOR LINER - INNER HALF
025	Y313340			LABEL, LINT SCREEN INSTRUCTION
026	Y313927			INSTRUCTION LABEL
027	314077			Door Seal
028	NLA		Not Available	GAS IGNITION LABEL
029	314286			Seal For Front Panel

the laundry company®
the laundry company®