Maytag GDG27CS 07 - CONTROL CENTER SHROUD

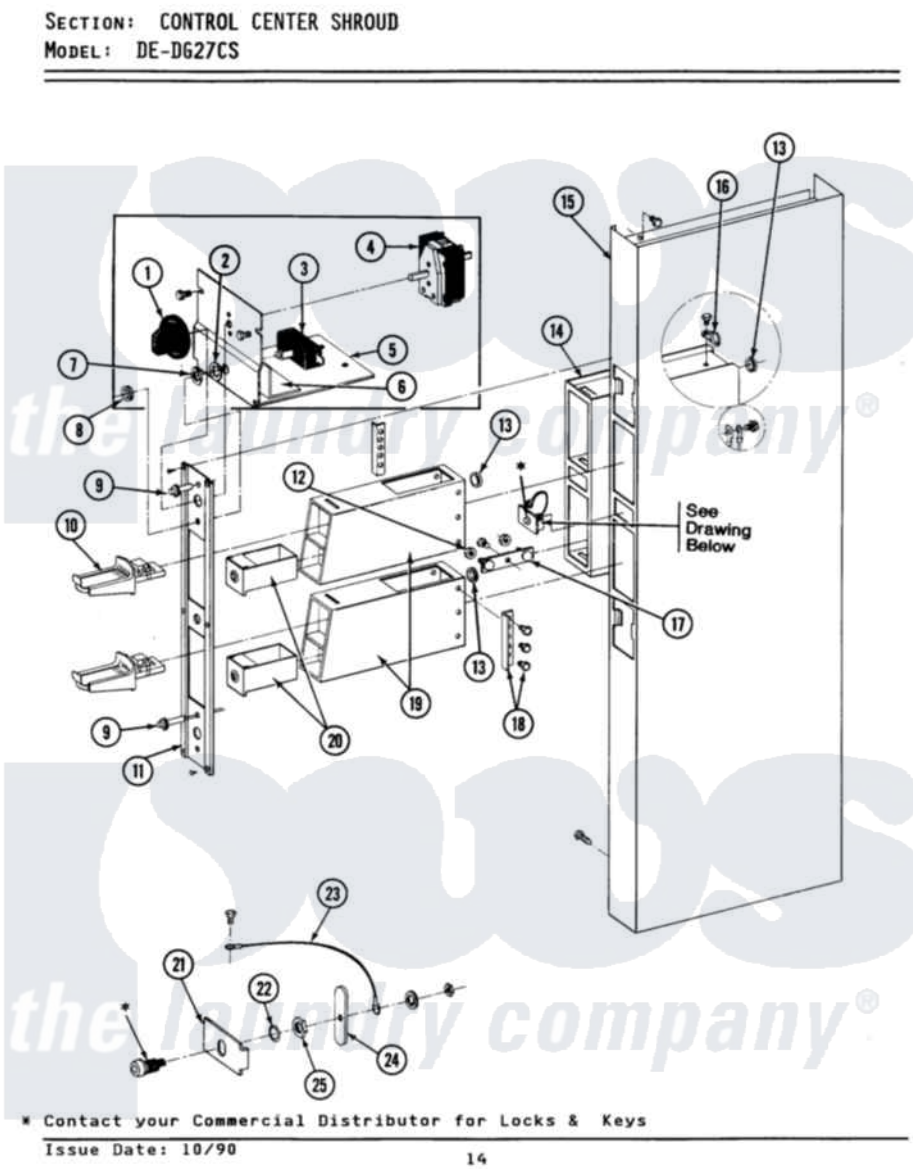

Maytag Commercial Maytag GDG27CS Dryer Parts Parts Diagram 07 - CONTROL CENTER SHROUD
Click on the part number to view part

Item	Original Part Number	Replaced By	Status	Part Description
001	205663			Knob For Selector Switch
002	312751			Lockwasher, Start Switch
003	306940	W10149462		Switch, Push-To-Start
004	307253			Switch, Cycle Selector
"	Y313588	488234		Screw 8-32 X 1/4
005	212276	W10116760		Screw
"	Y314261			Switch And Relay Bracket
006	NLA		Not Available	INSULATOR
007	Y312706	422617		Nut
008	Y312702			Knurled Nut, Start Switch
009	303963		Not Available	LIGHT, INDICATOR
010	NLA		Not Available	MAYTAG COIN SLIDE
011	315037		Not Available	PANEL, VAULT
"	Y313424			Screw, Vault Panel
012	Y052740	62739		Nut, Lock
013	Y313671	33001303		Grommet, Plate Hole

014	211294	90767		Screw, 8A X 3/8 HeX Washer Head Tapping
"	305534		Not Available	VAULT ASSEMBLY
"	Y310632	1163839		Screw
"	Y313559			Screw
015	213648	98165		Screw
"	NLA		Not Available	CONTROL SHROUD-WHITE
016	211168	W10139210		Screw, 8-18 X 5/16
"	910768	M0280301		Tie Electr
017	212276	W10116760		Screw
"	NLA		Not Available	MTG. STRAP----NA
018	NLA		Not Available	COIN METER STOP WITH SCREWS
"	Y014872			Screw, Coin Meter Stop -
019	Y307081			Coin Meter Weld Assembly
"	NLA		Not Available	COIN METER WELD ASSY-ALM----NA
020	205423	208883		Coin Box K
"	205423L	208883		Coin Box K
"	205423M	208883		Coin Box K
021	313428		Not Available	PLATE FOR LATCH
022	NLA		Not Available	SPRING WASHER FOR LOCK
023	211168	W10139210		Screw, 8-18 X 5/16
"	Y303981			Ground Wire For Latch
024	Y313427	206637		Lock Kit
025	212328	W10139762		Hex Nut, 3/4-27

pws the laundry company®
pws the laundry company®