Maytag LDG18CM 10 - FRONT PANEL & DOOR ASSEMBLY

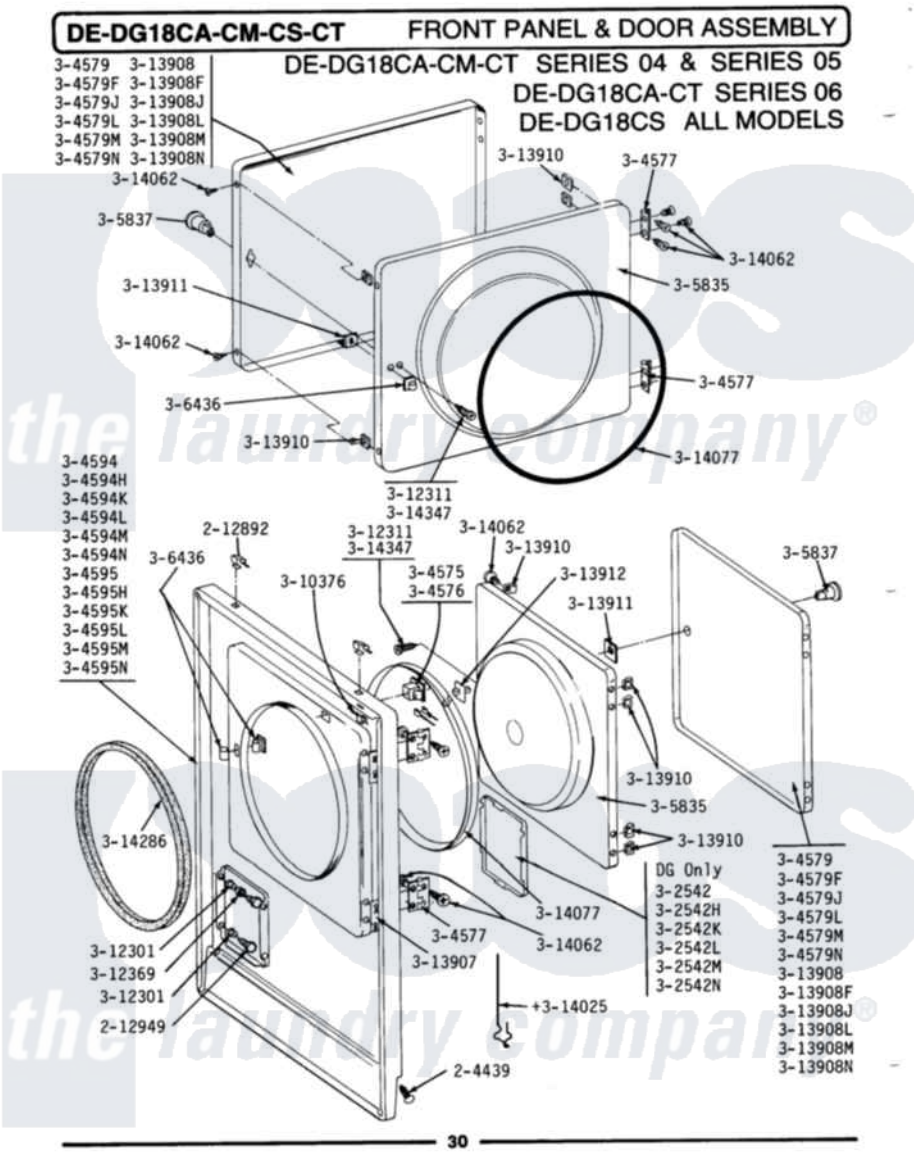

Maytag Commercial Maytag LDG18CM Dryer Parts Parts Diagram 10 - FRONT PANEL & DOOR ASSEMBLY
Click on the part number to view part

Item	Original Part Number	Replaced By	Status	Part Description
001	204439			Screw And Fstner Assembly
002	212949	22001866		Screw, Relay
003	212982	22001650		Fastener, Spring
004	NLA		Not Available	ACCESS DOOR (WHITE)
005	NLA		Not Available	ACCESS DOOR-ALMOND
006	NLA		Not Available	ACCESS DOOR-HARVEST WHEAT
007	Y304575	W10169313		Switch-Dor
008	Y304577	33001230		Hinge, Door
009	Y304579	Y306668		DOOR (WHT)
010	NLA		Not Available	DOOR-ALMOND
011	NLA		Not Available	DOOR-HARVEST WHEAT
012	NLA		Not Available	FRONT PANEL-WHITE
013	NLA		Not Available	FRONT PANEL-ALMOND
014	NLA		Not Available	FRONT PANEL-HARVEST WHEAT
015	NLA		Not Available	INNER DOOR WITH KNOB &

015	NLA	Not Available	SCRE
016	NLA	Not Available	KNOB AND SCREW
017	306436		Door Latch Kit--W
018	Y310376		Clip, Door Switch Harness
019	NLA	Not Available	BUSHING FOR ACCESS STUD
020	NLA	Not Available	SCREW----NA
021	312369		Sleeve, Access Panel Stud Part Not Used
022	Y313340		LABEL, LINT SCREEN INSTRUCTION
023	Y313907		Fastener, Twin
024	Y313908		DOOR PANEL-WHITE
025	NLA	Not Available	DOOR PANEL-ALMOND
026	NLA	Not Available	DOOR PANEL-HARVEST WHEAT
027	Y313910		Clip, Door Liner To Outer Panel
028	Y313911		Door Strike Retainer
029	Y313927		INSTRUCTION LABEL
030	Y314025		Latch For Access Door
031	Y314062		Screw, Door Hinge And Panel
032	314077		Door Seal
033	NLA	Not Available	GAS IGNITION LABEL
034	314286		Seal For Front Panel
035	NLA	Not Available	SCREW FOR DOOR KNOB----NA

the laundry company®