Maytag MAH14PNAEW 03 - CABINET-FRONT

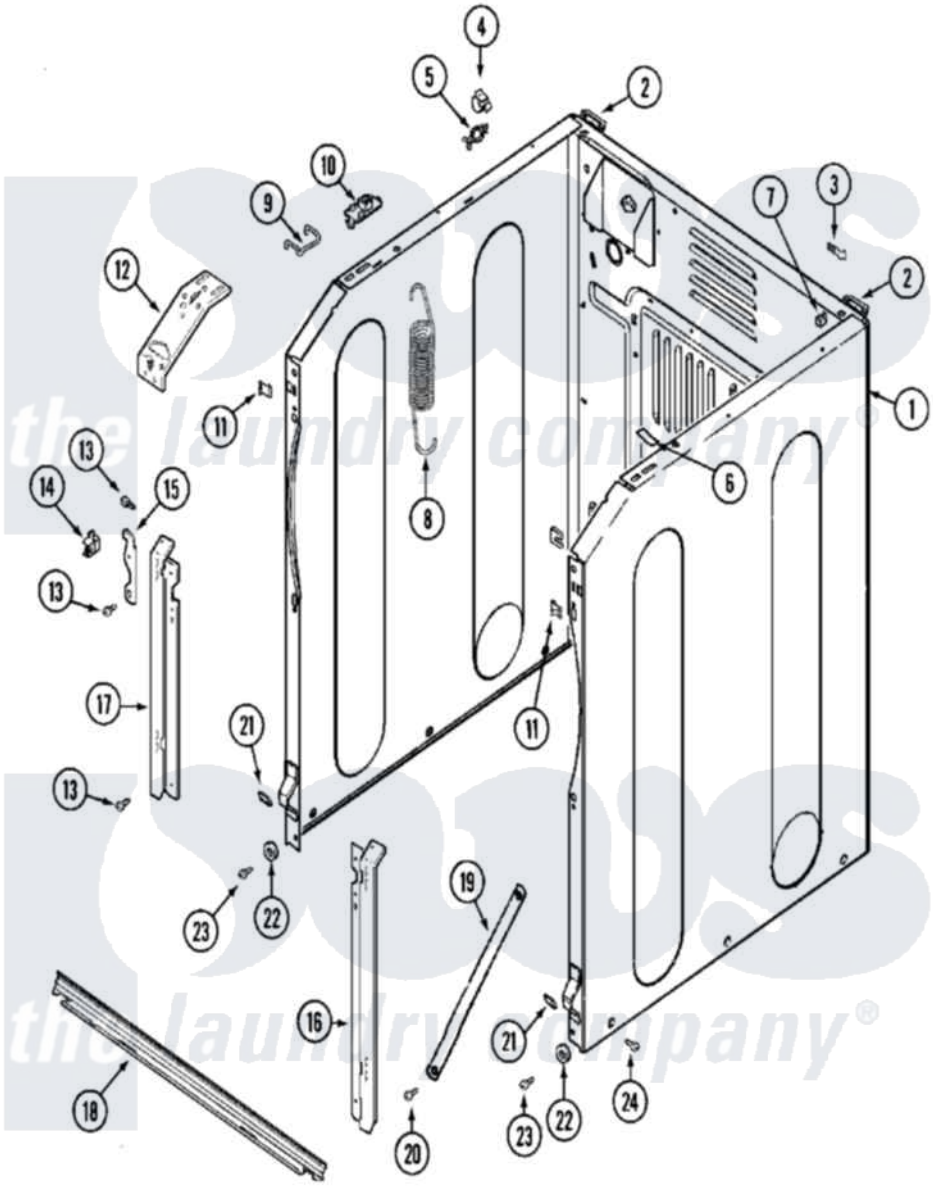

Maytag Commercial Maytag MAH14PNAEW Washer Parts Parts Diagram 03 - CABINET-FRONT
Click on the part number to view part

Item	Original Part Number	Replaced By	Status	Part Description
001	22002245	22003639		Cabinet Assembly
"	22003639			Cabinet Assembly
"	NLA		Not Available	CABINET (WHT)
002	22001995			Screw Note: Screw, Tumbler Front And Shroud
"	22003367	22004095		Hinge, Plastic
"	NLA		Not Available	BRACKET, CABINET HINGE
003	22001996	3370225		Screw
"	22002178			Bracket, Air Dome Hose
"	NLA		Not Available	TIE, WIRE
004	Y310376			Clip, Door Switch Harness
005	315471	22003298		Retainer, Wire
006	33001836			Strap, Top Cover Support
007	310933	33002194		Nut, Speed
008	22002100			Spring
009	22002098	22002297		Support, Spring
010	22001997			Spacer, Top Cover

011	22002049		Clip Note: Clip, Front Panel
012	22002090		Brace, Corner
013	22001995		Screw Note: Screw, Tumbler Front And Shroud
014	22002001		Support, Hinge
015	22002247	33002597	Hook, Security
016	22002034	22003224	Bracket, Shroud
017	22002035	22002985	Bracket, Shroud
018	22001993		Bridge, Shroud Support
"	22003638	22003652	Shroud Support Assembly
019	22002259	22002767	Brace, Cross
020	22001995		Screw Note: Screw, Tumbler Front And Shroud
021	22002239		Clip, Front Panel
022	22002025		Disc, Front Panel Spacer
023	22001995		Screw Note: Screw, Tumbler Front And Shroud
024	213007		Xfor Cabinet See Cabinet, Back
"	22003409	213007	Xfor Cabinet See Cabinet, Back

the laundry company®

the laundry company®