Maytag MAH22PRBWW0 01 - TOP AND CABINET PARTS

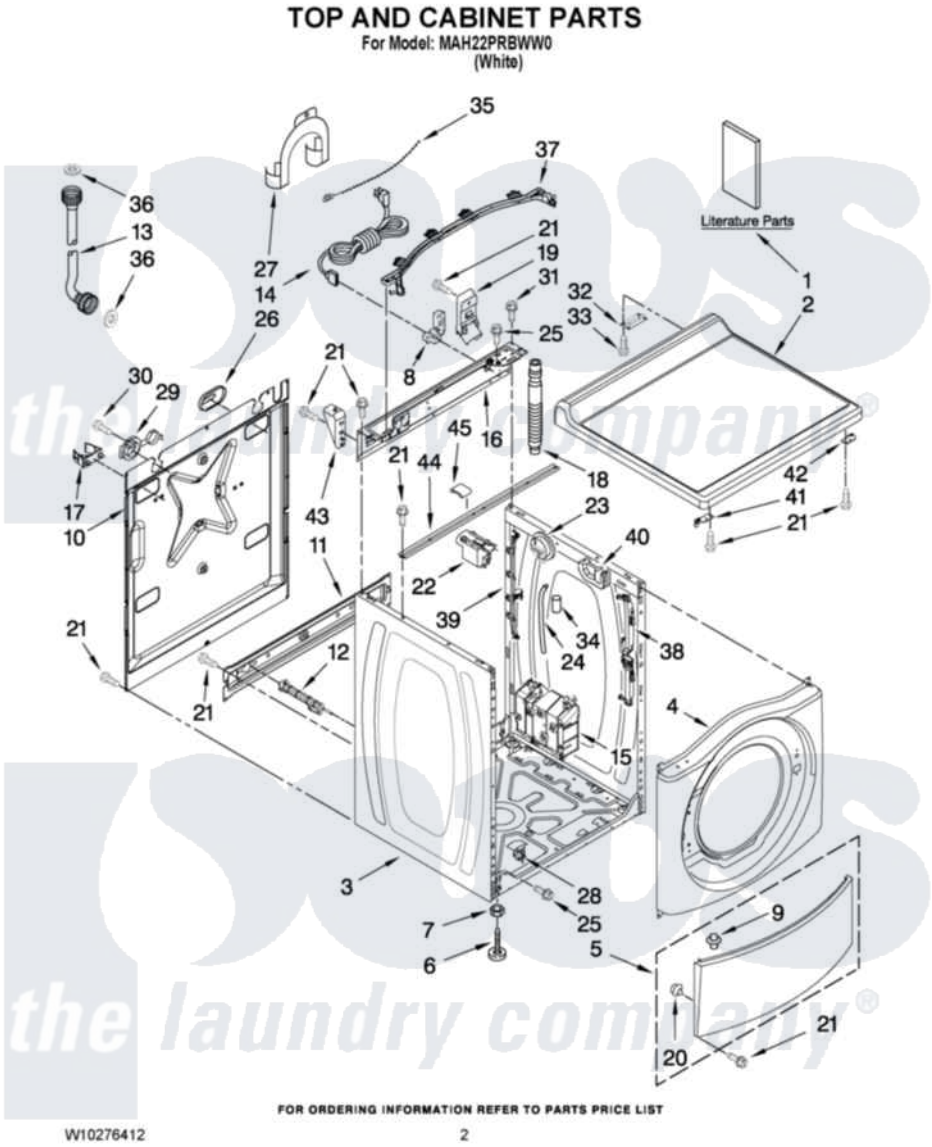

Maytag Commercial Maytag MAH22PRBWW0 Washer Parts Parts Diagram 01 - TOP AND CABINET PARTS
Click on the part number to view part

Item	Original Part Number	Replaced By	Status	Part Description
1	W10277179		Not Available	INSTALLATION INSTRUCTIONS
"	W10273155		Not Available	TECH SHEET (ENGLISH)
"	W10273156		Not Available	TECH SHEET (FRENCH)
"	W10165325		Not Available	Installation Instructions, Card Reader
"	W10276412			REPAIR PARTS LIST
2	W10137410			Top
3	W10201831	W10410294		Cabinet
4	W10112948	W10306505		Panel, Front
5	8540813	8540664		Toe Panel
6	W10245373			Foot, Leveling
7	3359452			Nut, Lock
8	W10110676	8182635		Strain Relief
9	8518891			Rivet
10	8540582			Panel, Rear
11	W10189659			Brace, Transport

12	8540199	W10285622	Bolt
13	W10194208	89503	Hose-Inlet
"	8571378	89503	Hose-Inlet
14	W10205500	W10205499	Cord, Power
15	W10197864		Motor Control Unit
16	W10161694		Brace, Rear
17	W10182936		Clamp, Tube- Transportation
18	W10114608		Hose, Drain
19	8540607		Retainer, Hose Outlet
20	238614		Bumper And Isolation
21	W10015090	489442	Screw 3 2217757 Roller, Front
22	8540230	W10339736	Filter, Interference
23	W10163980		Switch, Pressure
24	8540294		Hose, Pressure Switch
25	8540479		Screw, Grounding
26	8540268		Cover, Transport
27	8540021	W10280024	U-Bend, Drain Hose
28	W10085220		Microswitch
29	8540728	8182699	Grommet, Cord Support
30	8540727	8182201	Screw, 3 X 8 mm
31	8540329		Screw, 8-18 X 7/16
32	8565018		Assembly, Hinge And Pin
33	342055	488627	Screw
34	2161302	2162499	Sleeve, Suction Line
35	3347868	W10339879	Tie, Cable
36	3976300	16123	Washer Inlet-Hose Miscellaneous Parts Must be Ordered Separately.
37	W10168548		Harness Channel, Top Rear
38	W10168546		Harness Channel, Side Front
39	W10168547		Harness Channel, Side Rear
40	8540643		Bracket, Spring
41	W10137445		Bracket - Top Panel, Left
42	W10137444		Bracket - Top Panel, Right
43	W10137398		Stop, Top Panel
44	8540721		Brace, Top
45	8283273		Damper, Brace

the laundry company®