Maytag MAT12CSAAW 04 - TUB

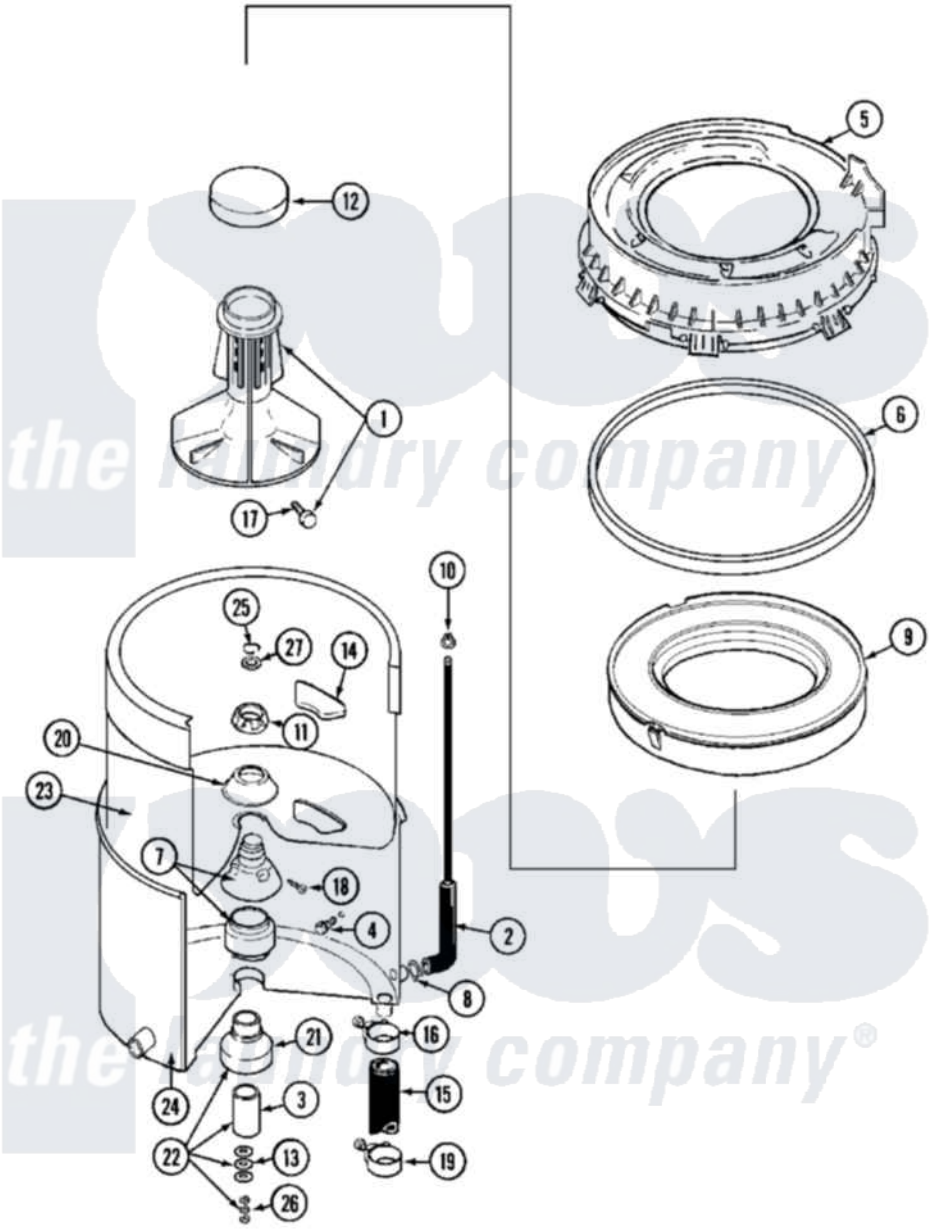

Maytag Commercial Maytag MAT12CSAAW Washer Parts Parts Diagram 04 - TUB
Click on the part number to view part

Item	Original Part Number	Replaced By	Status	Part Description
001	208543			Agitator
002	212942	22001619		Tube, Water Level Switch
003	211130			Bearing Liner, Tub Bearing
004	200744	W10175939		Bolt
"	205254	W10175938		Bolt
005	22001606	12001270		Kit, Injector Acc.
006	Y22001201	22001007		Gasket, Cover To Tub
007	22001648	6-2095720		Mounting S
008	211641			Clamp, 1-1/16"
009	22001142			Ring, Balance
010	410296	596669		Clamp, Manifold
011	211047	6-2110472		Nut- Clamp
012	215532			Cap, Agitator
013	211100			Washer, Outer Tub
014	215980			Plug, Filter Hole
015	Y212989			Hose, Outer Tub To Pump

016	22001640	285655		Clamp, Hose
017	206478		Not Available	SCREW & WASHER FOR AGITATOR
018	22001423			Set Screw, Mounting Stem
019	22001640	285655		Clamp, Hose
020	211210			Washer, Clamping Nut
021	200824	6-2040130		Tub Bearin
022	204013	6-2040130		Tub Bearin
023	22001141	Y2201881		Tub, Inner Short White SP
024	22001115	22003312		Tub, Outer
025	Y015667			Retaining Ring
026	Y054867			Washer, Lock
027	Y015666			Washer, Retaining -

the laundry company®
the laundry company®
the laundry company®