Maytag MAT13MNDAW 03 - CABINET

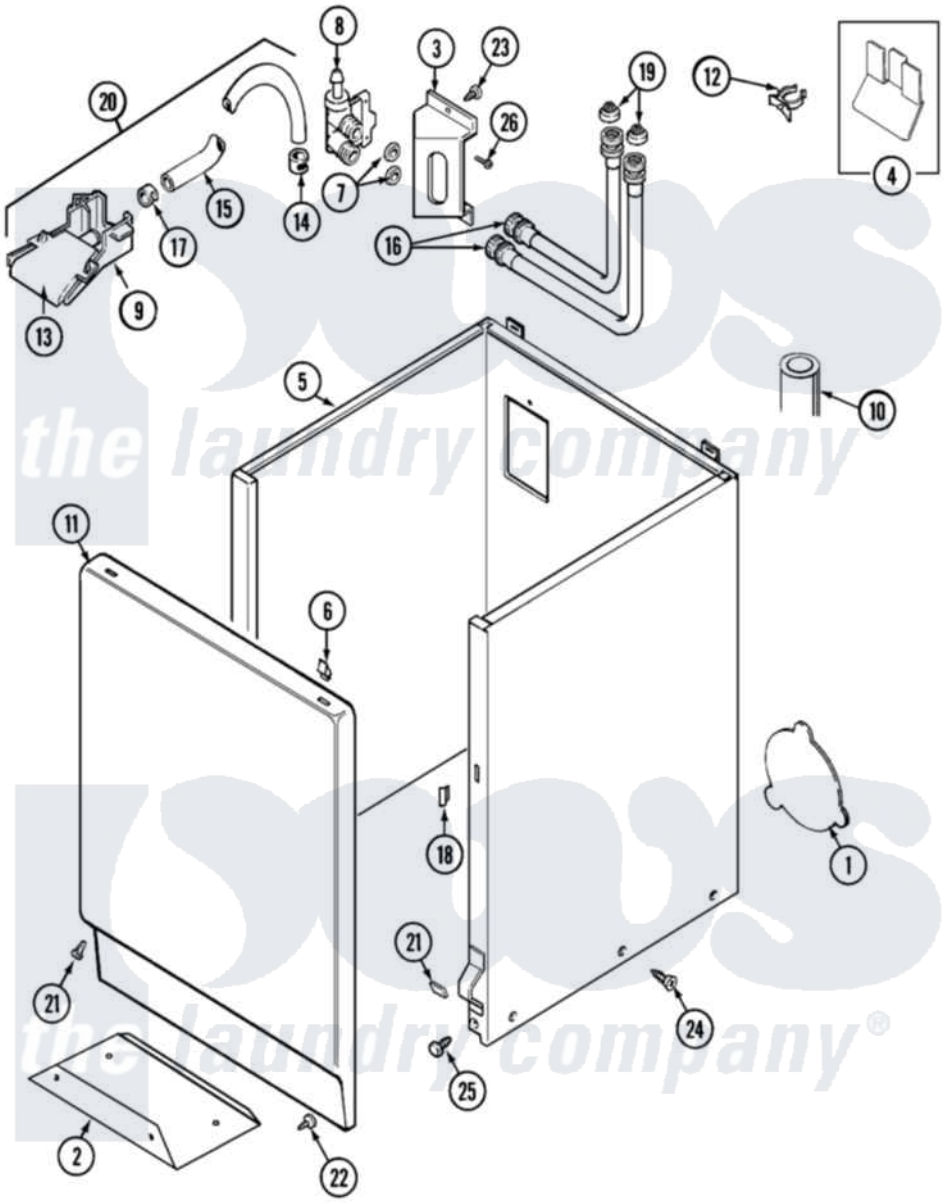

Maytag Commercial Maytag MAT13MNDAW Washer Parts Parts Diagram 03 - CABINET
Click on the part number to view part

Item	Original Part Number	Replaced By	Status	Part Description
001	211294	90767		Screw, 8A X 3/8 HeX Washer Head Tapping
"	22002924			Plate, Access
"	NLA		Not Available	PLATE, ACCESS
002	213846			Guard, Belt
003	22002361			Bracket, Water Valve
004	22001972			Clip, Cabinet
005	NLA		Not Available	CABINET (WHT)
006	22001650			Fastener, Spring
007	Y013783			Washer, Inlet Hose
008	22001275			Valve, Water
009	22001187			Injector
010	22003410			Hose, Drain
011	22001803		Not Available	PANEL, FRONT (WHT)
012	22002151			Clip, Hose
013	22001186			Injector
014	216169	596669		Clamp, Manifold

015	22001190		Hose, Injector
016	22003682	12001901	Kit-Inlet Hose Assembly
"	22003683	12001900	Kit-Inlet Hose Assembly
017	216170	489503	Clamp
018	214376	22002331	Spacer, Front Panel
019	22002960		Strainer, Washer Inlet
020	22001304		Water Injector Assembly
021	22001496		Front Panel Fastener And Screw
022	211294	90767	Screw, 8A X 3/8 HeX Washer Head Tapping
023	22003817	3370225	Screw
024	213007		Xfor Cabinet See Cabinet, Back
025	213121	3400111	Screw, 12-14 X 5/8
"	213122	27001200	Screw
026	Y313561		Screw----NA

the laundry company®
the laundry company®