Maytag MDE12MNAGW 02 - CABINET-FRONT

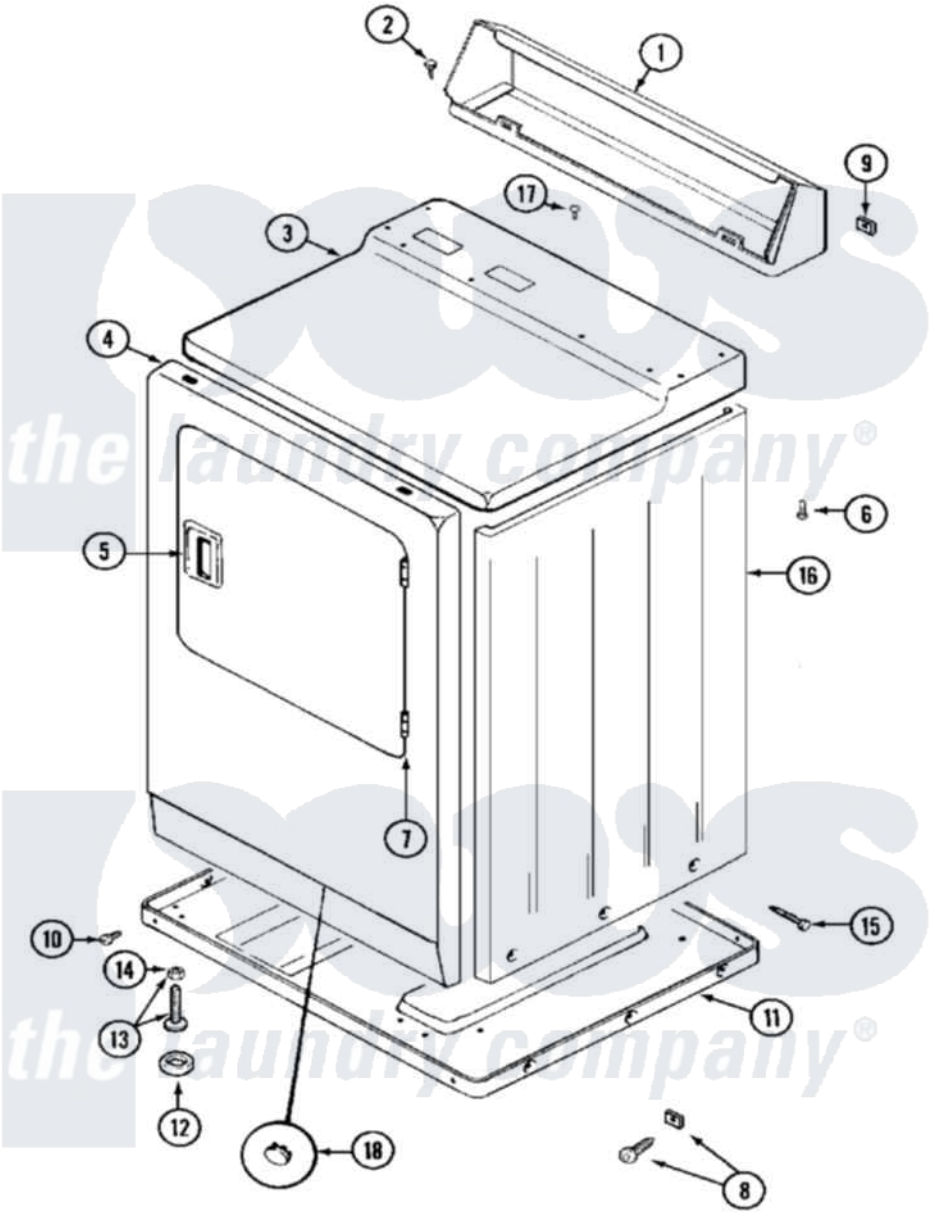

Maytag Commercial Maytag MDE12MNAGW Dryer Parts Parts Diagram 02 - CABINET-FRONT
Click on the part number to view part

Item	Original Part Number	Replaced By	Status	Part Description
001	33001280			Console
002	212276	W10116760		Screw
003	NLA		Not Available	COVER, TOP (WHT)
004	33001486	98008544		Screw
"	NLA		Not Available	PANEL, FRONT (WHT)----NA
005	33001241			Handle, Door
006	214354			Screw, Top Cover To Cabnt.
007	33001230			Hinge, Door
008	22001496			Front Panel Fastener And Screw
009	215075			Fastener, Control Panel To Console
010	Y313561			Screw----NA
"	Y310632	1163839		Screw
011	Y303361		Not Available	BASE ASSY. (UPPER & LOWER)
012	Y314137			Foot, Rubber

013	Y305086			Adjustable Leg And Nut
014	Y052740	62739		Nut, Lock
015	213007			Xfor Cabinet See Cabinet, Back
016	NLA		Not Available	CABINET (WHT)
017	210186	3370225		Screw
018	33001614		Not Available	PLUG, FRONT PANEL (WHT)

the laundry company®
the laundry company®
the laundry company®