Maytag MDE22PDBZW0 01 - TOP AND CONSOLE PARTS

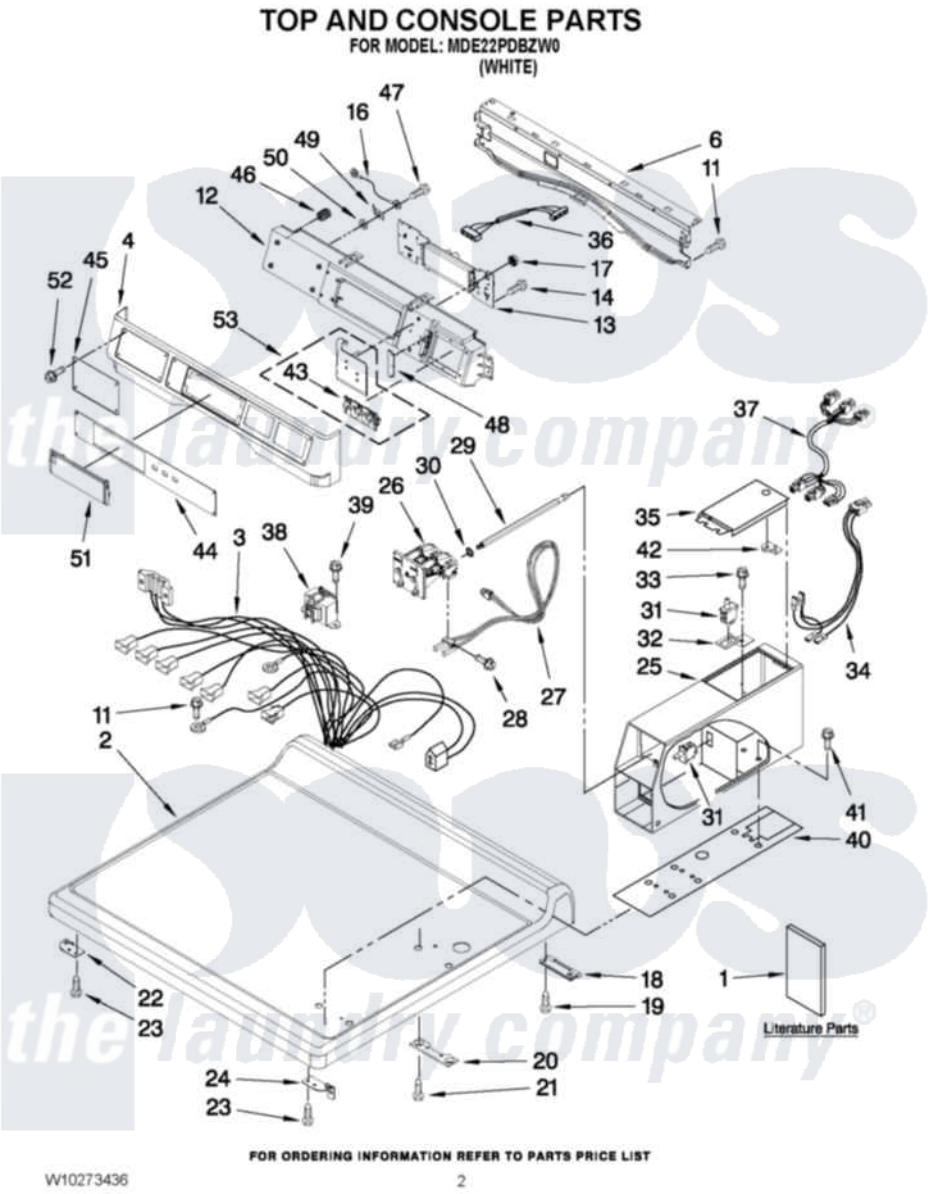

Maytag Commercial Maytag MDE22PDBZW0 Dryer Parts Parts Diagram 01 - TOP AND CONSOLE PARTS
Click on the part number to view part

Item	Original Part Number	Replaced By	Status	Part Description
1	W10135154		Not Available	Installation Instructions
"	W10239200		Not Available	TECH SHEET
"	W10273436			Parts List
2	W10137411			Top
3	W10166306			Harness, Main
4	W10137459			Console
6	8565237			Bracket, Console
11	3390647	488729		Screw
12	W10137427			Console
13	W10166360			User-Interface Assembly
14	489136			Screw, 3-24 X 1/32
16	W10188087			Ground Wire Assembly
17	W10139046			Nut 6-32
18	8565018			Assembly, Hinge And Pin
19	342055	488627		Screw
20	3347825	3353813		Plate, Mounting

21	98445		Screw, 10-16 X 3/4
22	W10137445		Bracket - Top Panel, Left
23	3390647	488729	Screw
24	W10137444		Bracket - Top Panel, Right
25	W10171128		Meter Case
26	W10133245		Dual Coin Drop Assembly
27	W10130178	W10247389	Sensor
28	W10142655		Screw, 6-20 X 1.00
29	W10137319		Hex-Bar Bolt
30	W10068270		Washer, Lock
31	W10131838		Switch, Vault And Service Door
32	W10133508		Bracket, Service Switch
33	W10139210		Screw, 8-18 X 5/16
34	W10139456		Wire Harness, Sensor Switch
35	3351136		Service Door Assembly
36	W10166307		Harness, Communication
37	W10166308		Harness, Meter Case
38	W10131839		Transformer 120 To 22.5 Vac
39	8533971	90767	Screw, 8A X 3/8 HeX Washer Head Tapping
40	W10137448		Cushion, Meter Case
41	W10223792		Bolt, Meter Case Mounting
"	W10223799		Bolt, Meter Case Mounting
42	W10156125		Cam-Lock
43	W10131113		Push Button
44	W10137438		Fascia-Console
45	W10137461		Fascia-Dispenser
46	W10189313		Inserts
47	488234		Screw 8-32 X 1/4
48	W10187276		Seal, Console
49	3373818		Tab-Grounding
50	W10189075		Washer, Brass
51	W10131114		Cover, Display
52	W10137457		Screw, 8-32 X 3/64
53	W10135255		Assembly, Membrane Switch And Backer Plate

the laundry company®