Maytag MDE26CSACG 02 - REAR

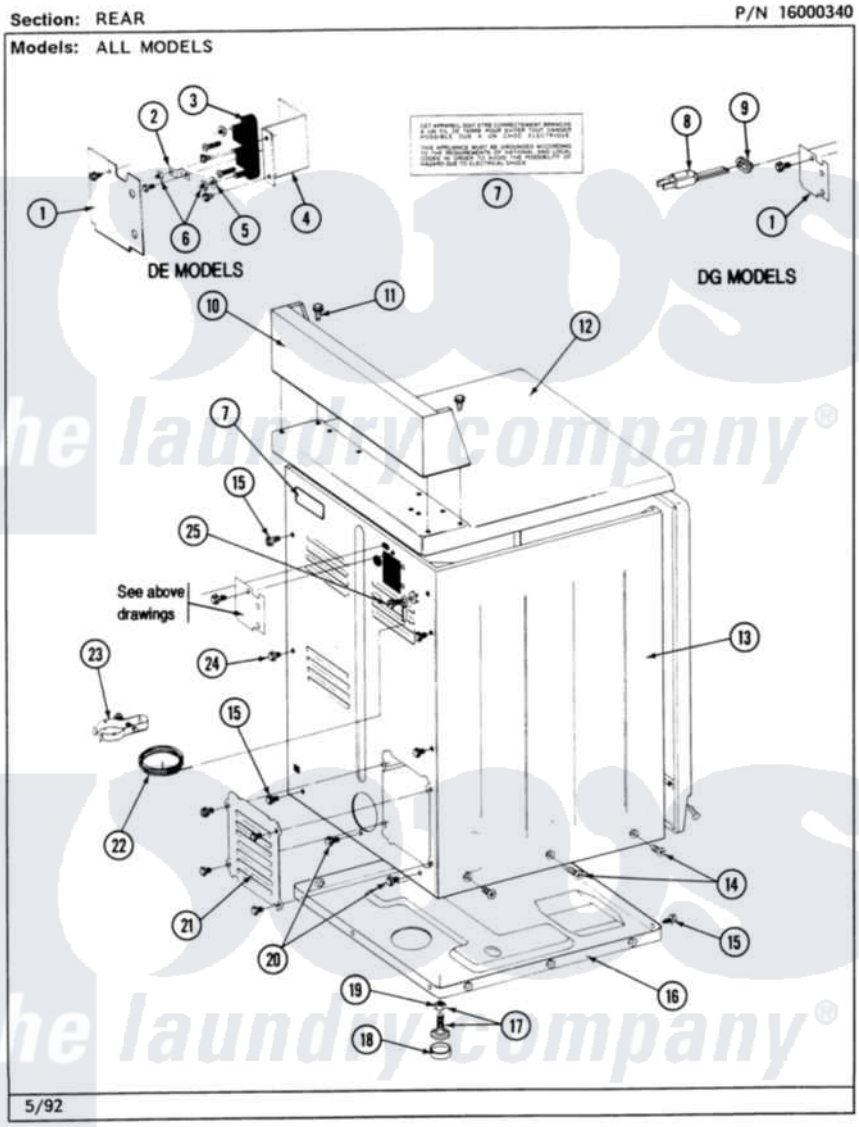

4

Maytag Commercial Maytag MDE26CSACG Dryer Parts Parts Diagram 02 - REAR
Click on the part number to view part

Item	Original Part Number	Replaced By	Status	Part Description
001	Y313561			Screw----NA
"	Y312905		Not Available	COVER, TERMINAL
002	Y311423	489483		Screw 10-32 X 1/2
"	Y312184			Strap, Grounding
003	400008			Block, Terminal
"	Y312209	W10001200		Screw
004	Y313561			Screw----NA
"	Y310632	1163839		Screw
"	Y312904			Bracket, Terminal Block
005	Y311270			Washer, Terminal Block
006	311484	112432		Nut
007	214519			LABEL, ELECTRICAL INSTR. PART NOT USED-GAS MODELS ONLY
008	302521		Not Available	CORD, POWER PART NOT USED-GAS MODELS ONLY
"	305168	33002916		Power Cord, Canadian 240V

009	211881			Grommet, Cord Part Not Used-Gas Models Only
010	NLA		Not Available	CONTROL COVER (WHT)
011	212276	W10116760		Screw
012	307105		Not Available	COVER, TOP ASSY. (WHT)
"	NLA		Not Available	(ALM)
013	NLA		Not Available	CABINET (WHT)
014	213007			Xfor Cabinet See Cabinet, Back
015	Y313561			Screw----NA
016	Y303361		Not Available	BASE ASSY. (UPPER & LOWER)
017	Y305086			Adjustable Leg And Nut
018	Y314137			Foot, Rubber
019	Y052740	62739		Nut, Lock
020	Y310632	1163839		Screw
021	211294	90767		Screw, 8A X 3/8 HeX Washer Head Tapping
"	Y312951		Not Available	ACCESS COVER, BACK
"	Y313559			Screw
022	311155			Ground Wire And Clamp
023	301548			Clamp, Ground Wire
"	NLA		Not Available	SCREW
024	Y310632	1163839		Screw
025	NLA		Not Available	SCREW & WASHER ASSY.

the laundry company®