Maytag MDE26PCAEL 07 - HEATER (A3 SERIES)

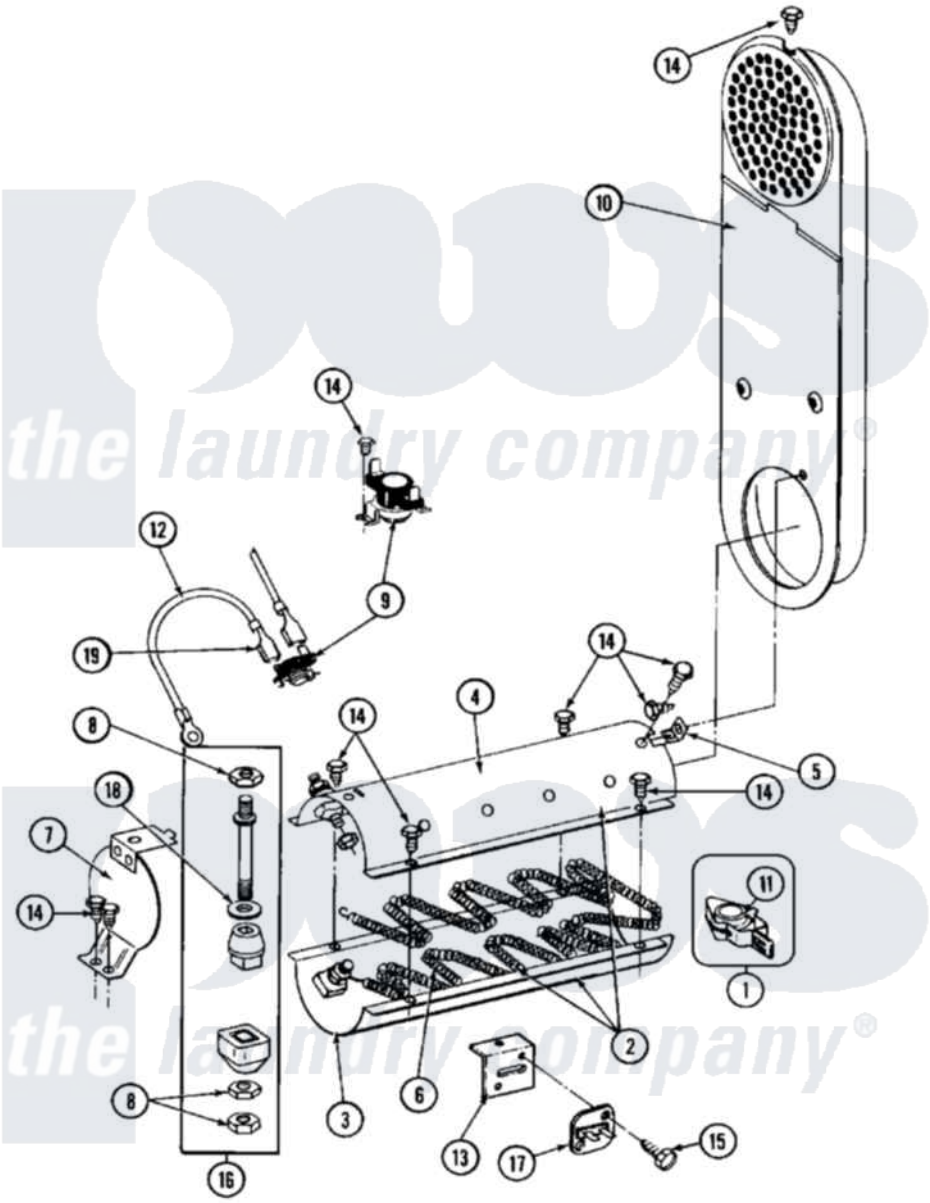

Maytag Commercial Maytag MDE26PCAEL Dryer Parts Parts Diagram 07 - HEATER (A3 SERIES)
Click on the part number to view part

Item	Original Part Number	Replaced By	Status	Part Description
001	211294	90767		Screw, 8A X 3/8 HeX Washer Head Tapping
002	NLA		Not Available	INLET DUCT ASSY.
003	314995			Enclosure, Heater
004	315346			Bracket, Thermal Fuse
005	NLA		Not Available	PART NOT USED
006	307473			Fuse, Thermal
007	314998			Insulator, Terminal
008	307187	W10116747		Heater
009	314999			Shield, Radiant
010	NLA		Not Available	SCREW
011	303396			Thermostat, Hi-Limit
"	Y307173			Wire, Jumper
012	Y308260			Heater Assembly Complete