Maytag MDE27PCADL 03 - TOP COVER

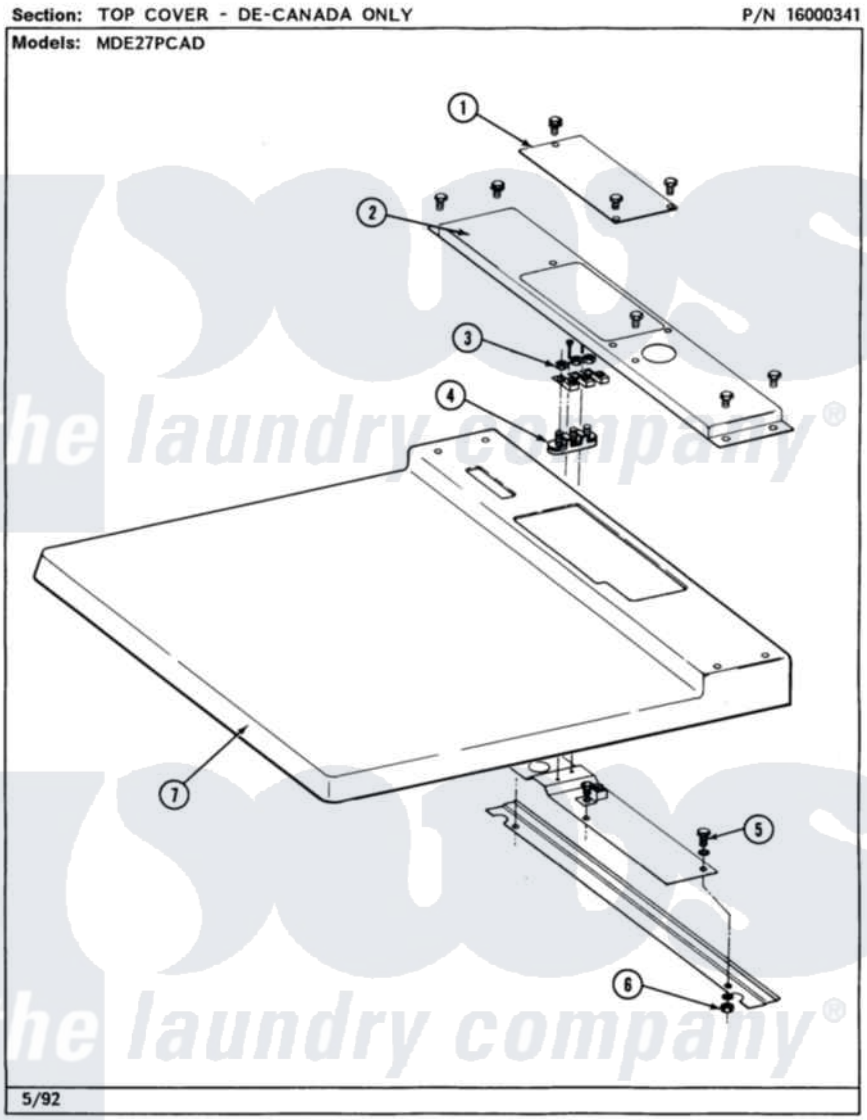

8

Maytag Commercial Maytag MDE27PCADL Dryer Parts Parts Diagram 03 - TOP COVER
Click on the part number to view part

Item	Original Part Number	Replaced By	Status	Part Description
001	211294	90767		Screw, 8A X 3/8 HeX Washer Head Tapping
"	Y313559			Screw
"	Y314174			Terminal Cover - Canada
002	211294	90767		Screw, 8A X 3/8 HeX Washer Head Tapping
"	NLA		Not Available	CONDUIT ENTRANCE
"	Y313559			Screw
003	311484	112432		Nut
004	400008			Block, Terminal
"	Y312209	W10001200		Screw
005	NLA		Not Available	SCREW
006	Y052721			Nut, Terminal Block Plate
007	NLA		Not Available	TOP COVER-WHITE