Maytag MDG27PCAAL 03 - CONTROLS & UPPER DRYER FRONT PANEL

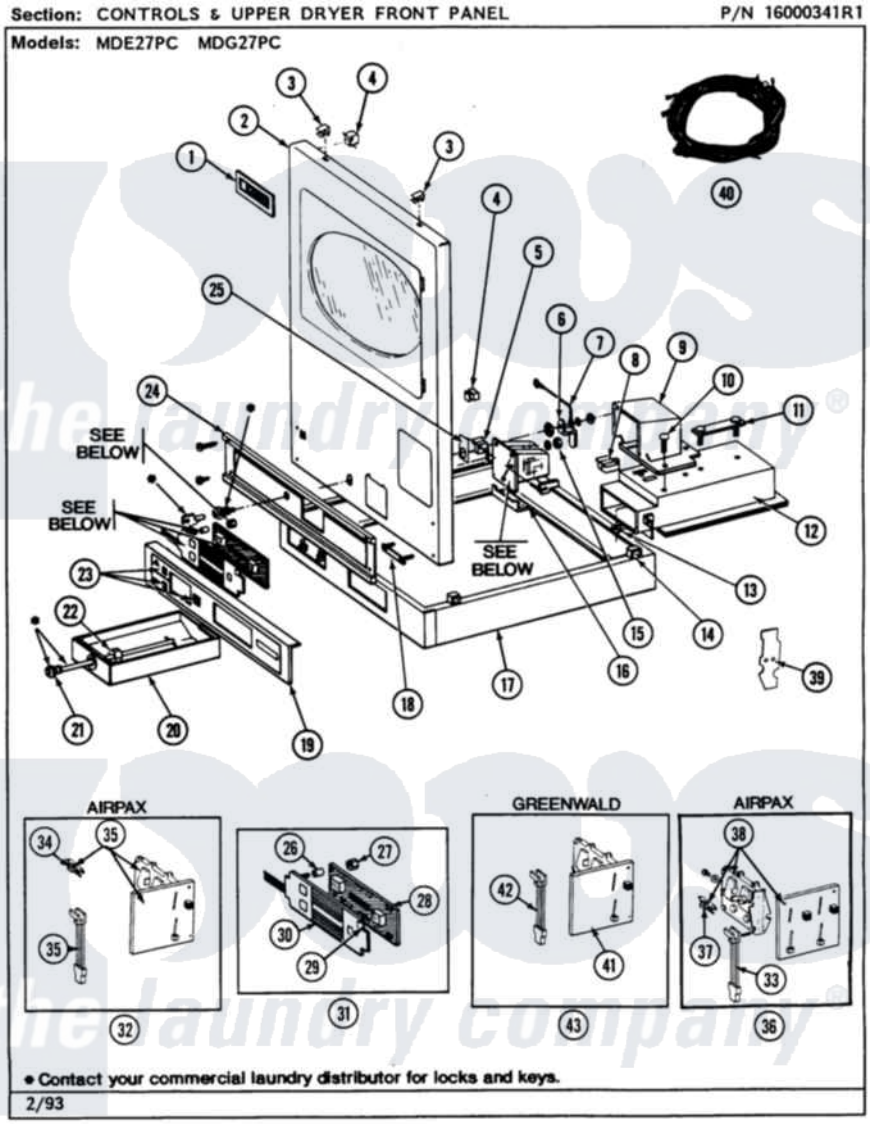

Maytag Commercial Maytag MDG27PCAAL Dryer Parts Parts Diagram 03 - CONTROLS & UPPER DRYER FRONT PANEL
Click on the part number to view part

Item	Original Part Number	Replaced By	Status	Part Description
001	NLA		Not Available	NAME PLATE
002	NLA		Not Available	FRONT PANEL - UPPER (WHITE)
003	212982	22001650		Fastener, Spring
004	Y310376			Clip, Door Switch Harness
005	211168	W10139210		Screw, 8-18 X 5/16
"	314979		Not Available	SHIELD, ACCESS SWITCH
"	912012	3400409		Screw
"	Y306232			Switch, Access
006	314625	206637		Lock Kit
007	Y306712	Y303981		Ground Wire For Latch
008	314635			Chute, Coin
009	NLA		Not Available	COIN DROP ASSEMBLY----NA
010	314654			Bolt, Coin Drop Cover
011	NLA		Not Available	MTG. STRAP----NA

012	910387			Lockwasher, Vault Assembly
"	NLA		Not Available	VAULT ASSY. (WHITE)
013	Y052740	62739		Nut, Lock
014	310933	33002194		Nut, Speed
015	Y052655			Hex Nut, No.8-32
016	Y313561			Screw----NA
"	314631			Bracket, Coin Mechanism
"	Y310632	1163839		Screw
017	NLA		Not Available	COUPLING COLLAR-WHITE
018	306233		Not Available	STRAP, COIN ACCEPTOR
019	NLA		Not Available	LOWER PANEL----NA
020	306219	308143		Tray, Coin
"	NLA		Not Available	(ALMOND)
021	NLA		Not Available	WASHER, SPRING
022	214104			Reinforcing Nut For Coin BO
023	314618			Lens
024	314664	212277		Screw, No.8 X 1/2 Inch
"	314666		Not Available	SCREW, PANEL (UPR)
"	NLA		Not Available	UPPER CONTROL EXTRUSION
025	314634			Bracket, Access Switch
026	912075			Spacer, Circuit Board
027	912077			Locknut, Reader Harness
028	NLA		Not Available	CONTROL BOARD ASSEMBLY
029	912086			Clip, Speed
030	306443			Touch Pad Assembly
"	910186	99002757		Screw
031	NLA		Not Available	CONTROL & TOUCH PAD ASSY.
032	Y307749	Y308122		Coin Rejector Assembly
033	314665			Screw, Switch Assembly
"	Y306224		Not Available	COIN SENSOR SWITCH
034	NLA		Not Available	BALANCE ARM W/WEIGHT ($.25)
035	Y307390	308121		Rejector Assembly
036	NLA		Not Available	COIN REJECTOR ASSY. (.10)
037	314713			Balance Arm W/Weight-$.10
038	NLA		Not Available	REJECTOR ASSY. (.10 - ACCESS)
039	314710		Not Available	COIN SLOT COVER (ACCESS)
040	306238		Not Available	(12 CIRCUITS FOR DE & DG
"	306239		Not Available	(14 CIRCUITS FOR DE & DG
"	308375			(UPPER)
"	314652			Tapered Beam Contact Usage Varies Between Harnesses
"	NLA		Not Available	WIRE HARNESS-LOWER
"	NLA		Not Available	EDGE BOARD CONNECTOR
041	308121			Rejector Assembly
042	314665			Screw, Switch Assembly
"	Y306224		Not Available	COIN SENSOR SWITCH
043	Y308122			Coin Rejector Assembly

the laundry company®