Maytag MDG75PN1AW 15 - BURNER ASSEMBLY (PROD. PRIOR 3/1/99)

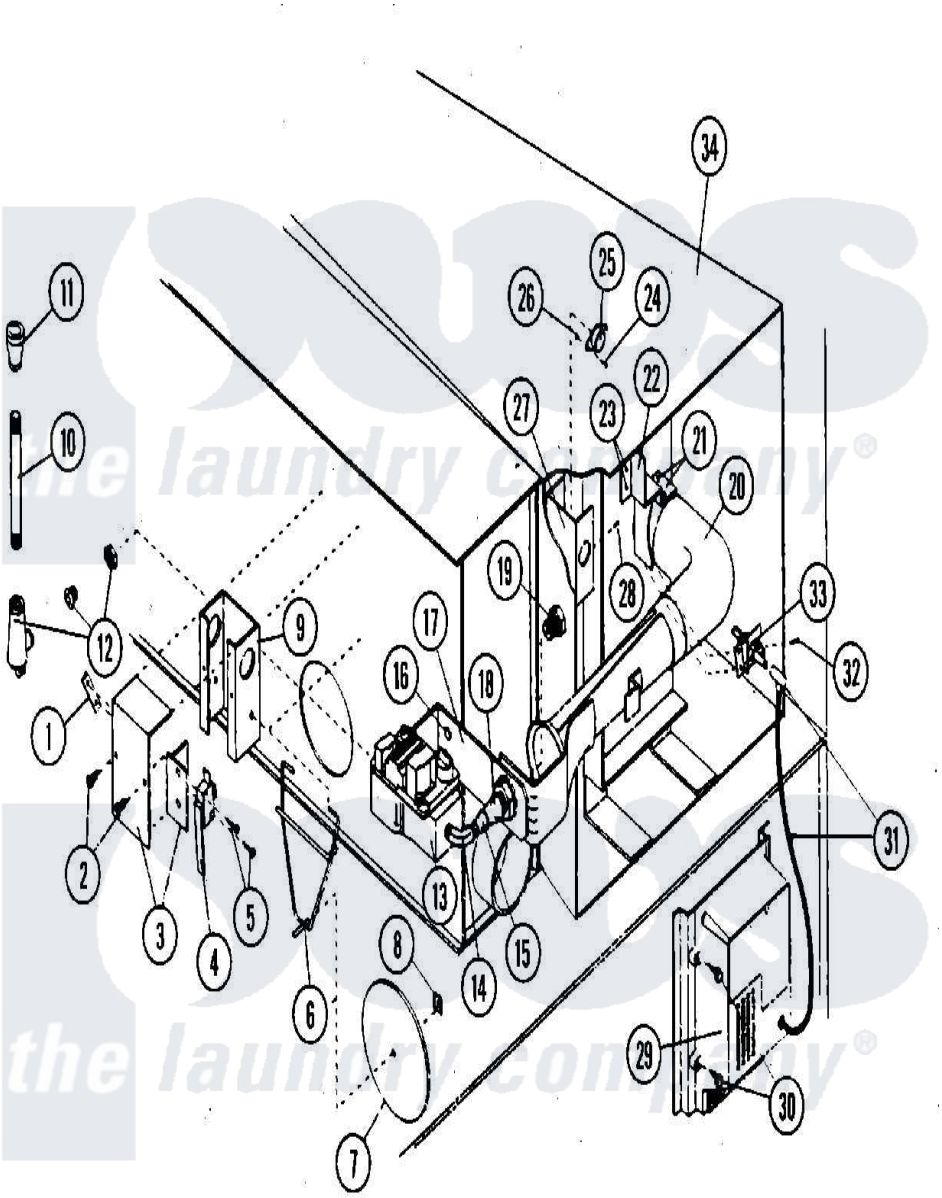

Maytag Commercial Maytag MDG75PN1AW Dryer Parts Parts Diagram 15 - BURNER ASSEMBLY (PROD. PRIOR 3/1/99)
Click on the part number to view part

Item	Original Part Number	Replaced By	Status	Part Description
000	W10124350		Not Available	ORDER PARTS FROM AMERICAN DRYER CORP AT 508-678-9000
001	A154004	154004		Tinnerman
002	A150309	W10146761		10-16 X 1
003	A802799	802799		Sail Sw.bo
004	A122200	122200		Sail Switch
005	A150303	150303		4 X 3 4 P
006	A105500	W10146641		Std Sail S
007	A319202	W10146866		Sail Switch
008	A154002	154002		1 8 Push O
009	A802800	802800		Sail Switch
"	A802801	802801		Sail Switch
010	A142812	142812		1 2 X 3 Ni
011	A143000	143000		1 2 X 3 4
012	A881367	W10148314		1 2 Un

013	A128927		Not Available	VALVE, GAS (REDUNDANT) (1/2`` 24 VAC, NATURAL GAS)
"	A140411		Not Available	CONVERSION KIT (1/2`` 24 VAC GAS VALVE (L.P.) W/O ORIFICES
014	A142506	142506		1 2 X 1 2
015	A142707	142707		1 2 X 1 1
016	A150415		Not Available	SCREW, CRIMPTITE (PH. RD.HD.) (No.10-16 X 1/2`` PH. RD. HD.)
017	A318710	318710		75 gas Val
018	A143000	143000		1 2 X 3 4
019	A141152	141152		21 Orifice
"	A141153	141153		Letter Siz
020	A141150		Not Available	UPSHOT BURNER W/SHUTTER & SPREADER
021	A150301	150301		8-18 X 7
022	A318708	318708		75 Burner
023	A150413		Not Available	SCREW, CRIMPTITE (No.10-16 X 1/2`` PH.)
024	A150001	150001		6-32 X 1 2
025	A130201		Not Available	HI-LIMIT (330 DEG.)
026	A151000	WH12X195		Switch Assembly
027	A318707		Not Available	HI-LIMIT MTG. BRKT. ONLY
028	A150309	W10146761		10-16 X 1
029	A880815			MODULE, DSI (50HZ/60HZ)
030	A150299	150299		10 X 1 H
031	A880330	W10148002		DSI Ignitor
032	A150413		Not Available	SCREW, CRIMPTITE (No.10-16 X 1/2`` PH.)
033	A305410	305410		Main Wire Harness
"	A874048	W10147902		75 Igni
034	A804001	W10149277		75 Upshot
"	A809619		Not Available	NATURAL GAS BURNER ASSY. COMPLETE (NO ORIFICE)(INCL.
"	A809620		Not Available	L.P. GAS BURNER ASSY. COMPLETE (NO ORIFICE)(INCL. ILLUS.
"	A874042	874042		75 Upsho

the laundry company®