Maytag MDG75PN1AW 19 - BURNER ASSEMBLY (PROD. 3/2/99-2/28/00)

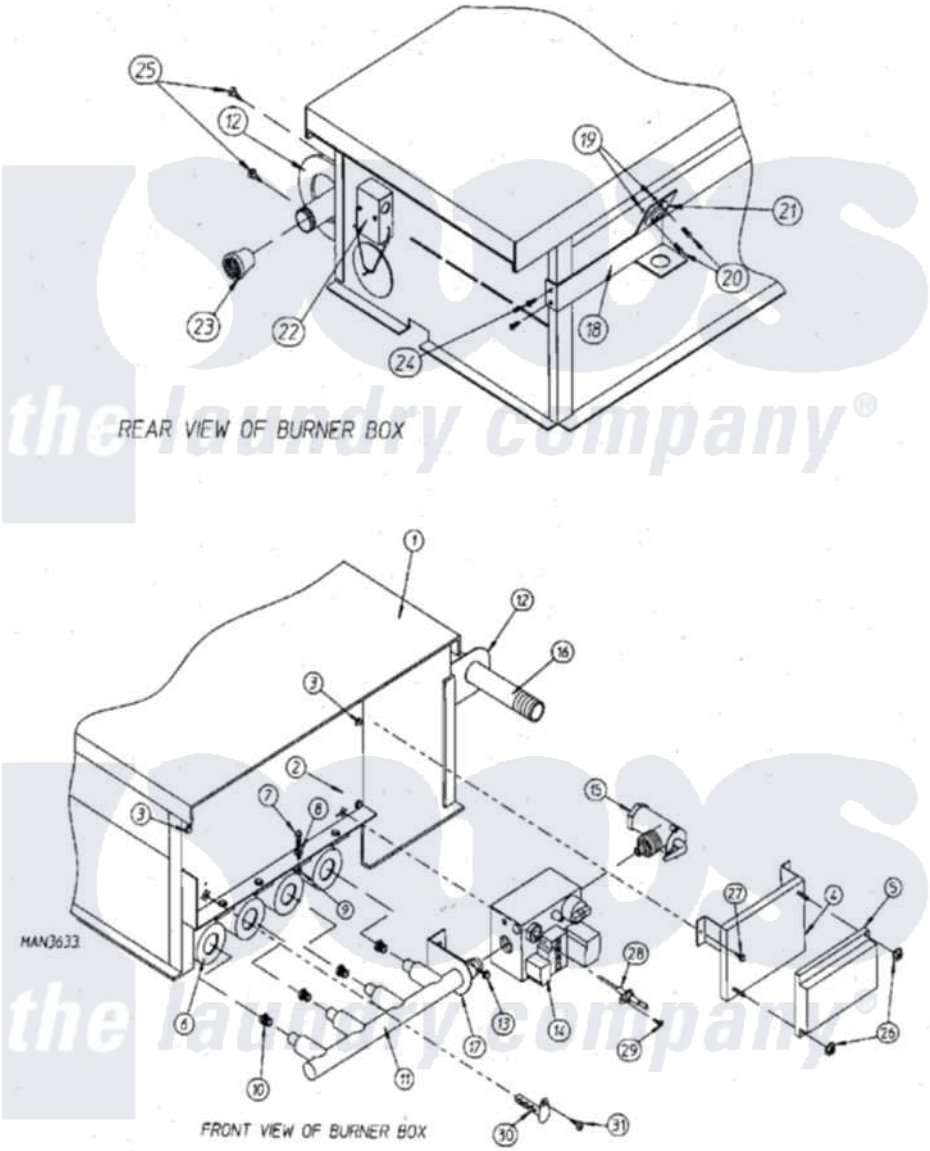

Maytag Commercial Maytag MDG75PN1AW Dryer Parts Parts Diagram 19 - BURNER ASSEMBLY (PROD. 3/2/99-2/28/00)
Click on the part number to view part

Item	Original Part Number	Replaced By	Status	Part Description
001	A881231	W10148243		AD75-MI75-
"	A881781	W10148475		75ml Natur
"	A881784	881784		ADG-75ml L
"	W10124350		Not Available	ORDER PARTS FROM AMERICAN DRYER CORP AT 508-678-9000
002	A318041	318041		ADG-75ml H
003	A150309	W10146761		10-16 X 1
004	A810029	810029		Fenwal Mod
005	A881797	W10148484		Hsi Module
006	A141105	W10146749		Large Gas
007	A150103	150103		8-32 X 3 4
008	A153000	153000		8 SAE WAS
009	A151001	W10146764		8-32 Pal N
010	A140804	140804		Burner Ori
"	A140820	140820		Burner Ori

011	A141210	141210		3 4 4-Por
012	A318700	W10146865		SM Burner
013	A150300	5307527001		Switch
014	A128927		Not Available	VALVE, GAS (REDUNDANT) (1/2`` 24 VAC, NATURAL GAS)
"	A140411		Not Available	CONVERSION KIT (1/2`` 24 VAC GAS VALVE (L.P.) W/O ORIFICES
"	A880960	W10148110		1 2 24V D
015	A881367	W10148314		1 2 Un
016	A142809	W10146757		1 2 X 29 1
017	A323737	323737		Ad-81 Gas
018	A319704	WB4X122		Medallion
019	A151000	WH12X195		Switch Assembly
020	A150001	150001		6-32 X 1 2
021	A130201		Not Available	HI-LIMIT (330 DEG.)
022	W10124350		Not Available	REFER TO SAIL SWITCH ASY SEC.
023	A143000	143000		1 2 X 3 4
024	A150309	W10146761		10-16 X 1
025	A150309	W10146761		10-16 X 1
026	A151001	W10146764		8-32 Pal N
027	A150309	W10146761		10-16 X 1
028	A128921	W10146721		Hsi Flame
029	A150301	150301		8-18 X 7
030	A881597	W10148404		Hot Surface
031	A150309	W10146761		10-16 X 1

the laundry company®
the laundry company®