Maytag MFR18PCAVS 06 - DOOR LOCK ASSEMBLY (SERIES 10)

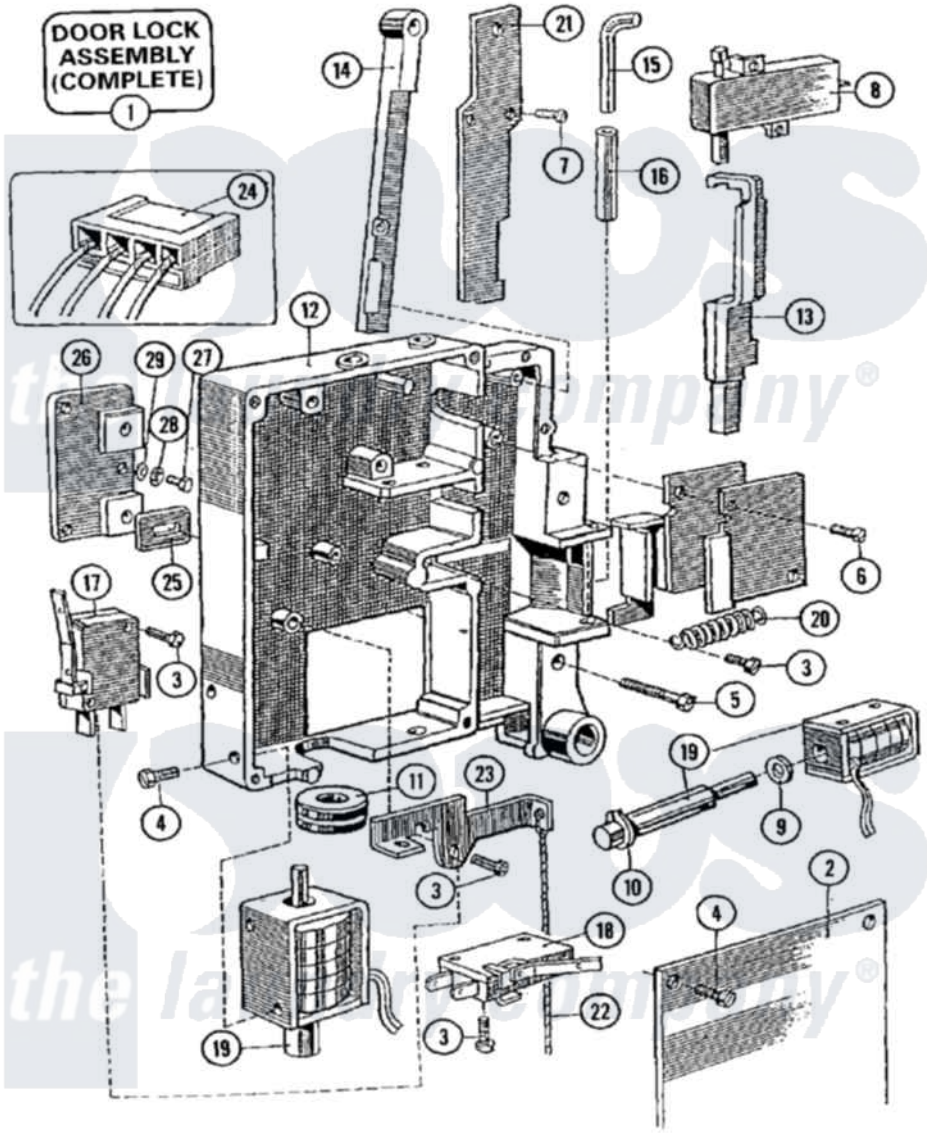

Maytag Commercial Maytag MFR18PCAVS Washer Parts Parts Diagram 06 - DOOR LOCK ASSEMBLY (SERIES 10)

Click on the part number to view part

Item	Original Part Number	Replaced By	Status	Part Description
001	Y23002897			Door Lock Assembly
002	23001130			Plate, Cover
003	23001131			Screw
004	23001132			Screw
005	23001133			Screw
006	23001070			Screw
007	23001134			Bolt
008	23001135			Bimetal, Actuator
"	23002207	23001135		Bimetal, Actuator
009	23001136			Washer
010	23001137			Ring, Retaining
011	23001138			Bushing, Cable Passage
012	23001139	Y23002898		Ground, Plate Lock
013	23001140			Small Lock Hook
014	23001141			Bar, Handle Latch
015	23001142			Retainer, Lock Tube

016	23001143		Tube, Lock
017	23001144		Microswitch, Lever
018	23001145		Microswitch, Lever
019	23001146		Coil
"	23001147		Coil
020	23001148	23002900	Spring, Locking Part
021	23001149		Leaf Spring, Latch Bar
022	23001152		Cord, Emergency Opening
023	23001153		Lever, Emergency Opening
024	23001154		Wiring Harness, Doorlock
025	23001155	23001368	Shim, Hinge Base
026	23001156		Spacer, Lock
027	23001157		Bolt
028	23001158		Lockwasher
029	23001159		Washer Lu

the laundry company®
the laundry company®
the laundry company®