Maytag MFR35PCAVS 15 - CABINET (SERIES 11)

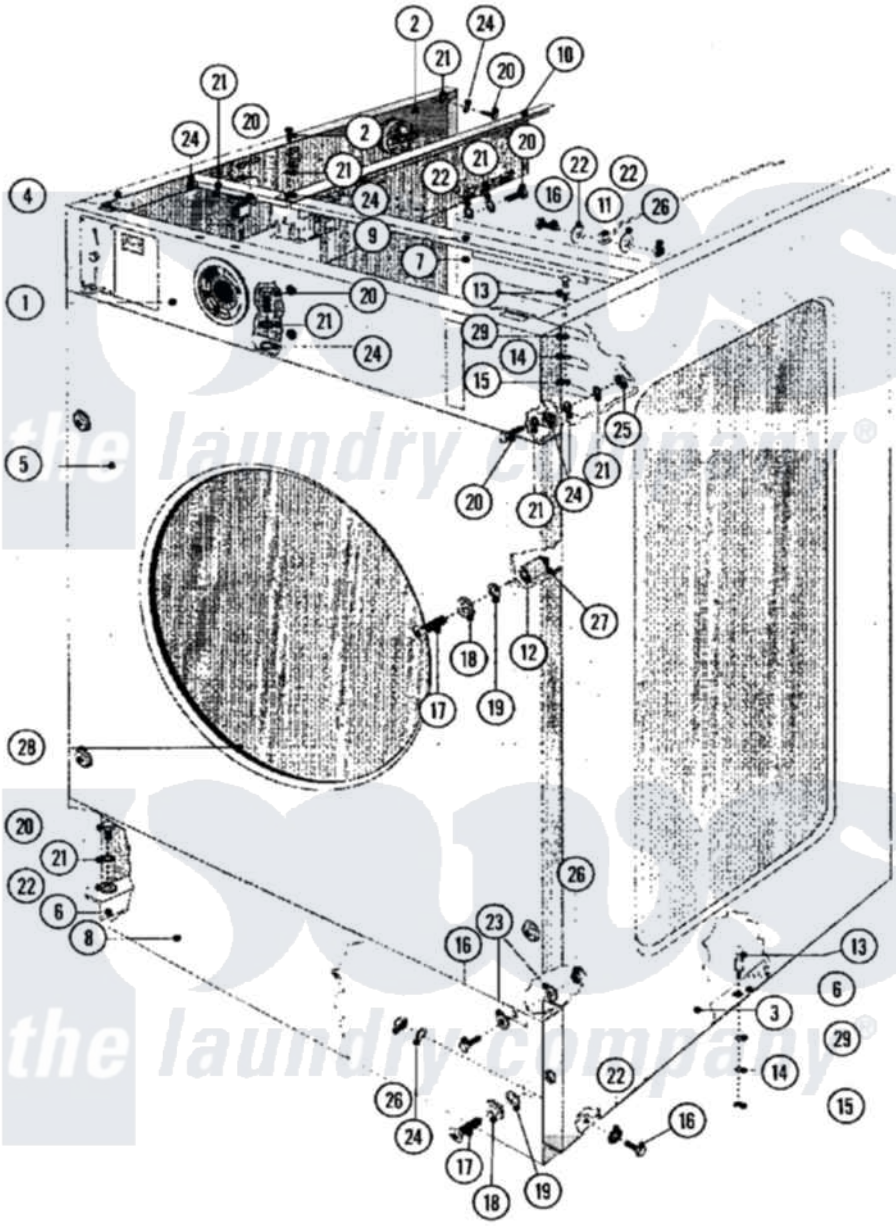

Maytag Commercial Maytag MFR35PCAVS Washer Parts Parts Diagram 15 - CABINET (SERIES 11)
Click on the part number to view part

Item	Original Part Number	Replaced By	Status	Part Description
001	23002848			Panel, Control
"	23002849			Panel, Control
002	23002850			Components, Box Elec.
003	23002851			Panel, Side
004	23002852			Panel, Side
005	23001320			Panel, Front
"	23002853			Panel, Front
006	23002854			Support, Panel
"	23002855			Panel, Support
007	23002856			Plate, Back
008	23002857			Panel, Service
009	23002858	23001327		Beam, Cross
010	23002859	23001327		Beam, Cross
011	23001330			Rod, Top Panel Support
012	23002860			Tube, Distance
013	23001332			Alignment Pin

014	23002465	23004485		Lock Washer M5
015	23002466	8184504		Nut
016	23002861			Screw Lu
017	23002456	23003478		Screw
018	23001337	23002457		Washer M6
019	23001338	23002458		Washer
020	23002354	23002461		Screw
021	23002756			Lockwasher
022	23001309			Washer Lu
023	23001203			Washer
024	23002282	23001027		Washer
025	23002436		Not Available	NUT (M6)
026	23002471	23001310		Nut, Self Locking
027	23001339	23002455		Nut, Rapid
028	23001088	23002473		Rubber, Protective
029	23002862	23001708		Washer

the laundry company®

the laundry company®