Maytag MLG32PDBWS 08 - LINT DOOR ASSEMBLY

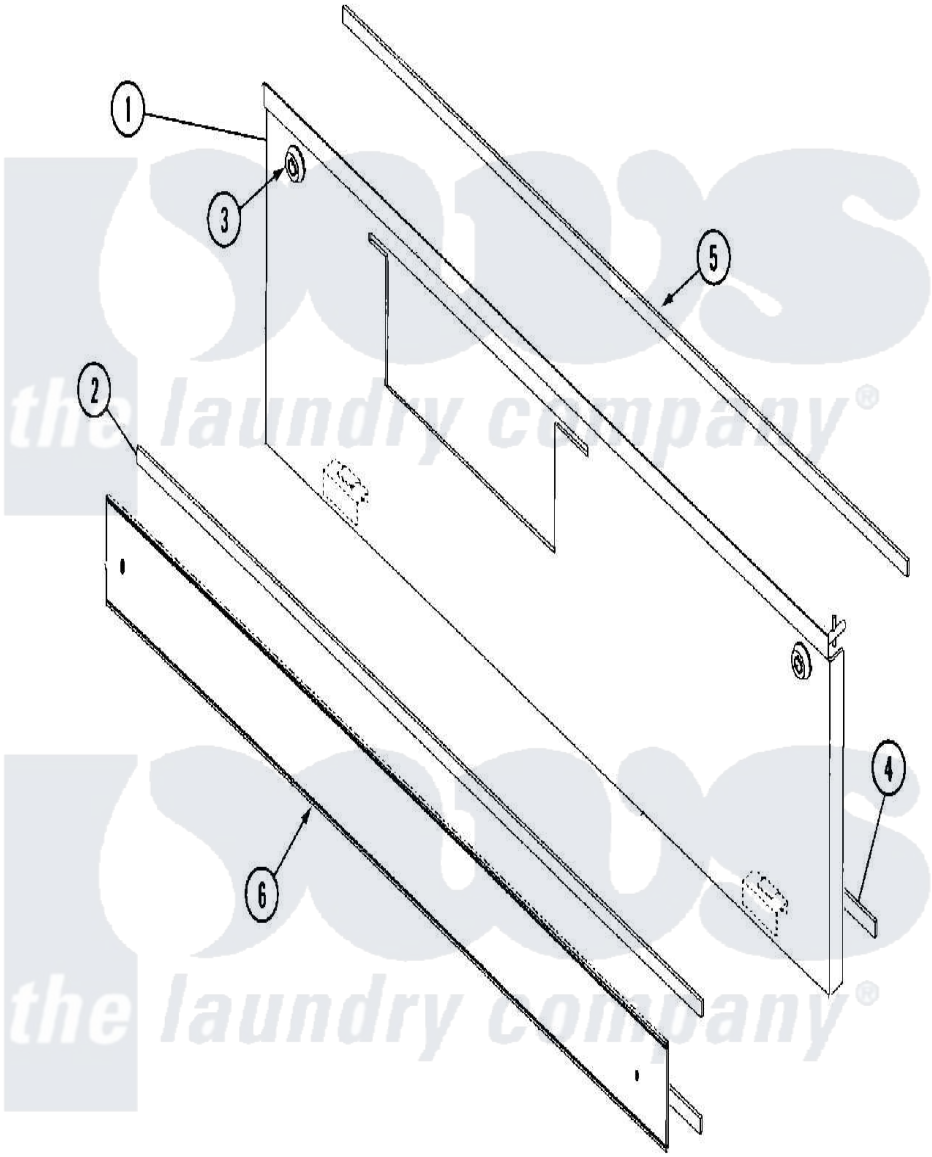

Maytag Commercial Maytag MLG32PDBWS Dryer Parts Parts Diagram 08 - LINT DOOR ASSEMBLY
Click on the part number to view part

Item	Original Part Number	Replaced By	Status	Part Description
000	W10124350		Not Available	ORDER PARTS FROM AMERICAN DRYER CORP AT 508-678-9000
001	A883500	883500		435 S S LO
002	A117516	117516		1 32 X 1 2
003	A160040	160040		Dp Control
"	A160140	160140		Key Only F
004	A117604	117604		1 8 Thk X
005	A117603	117603		1 8 X 9 1
006	A121513	W10146709		Microplast
"	A883495	883495		435 Blk Ki