Whirlpool CEM2750KQ0 04 - BULKHEAD, OPTIONAL

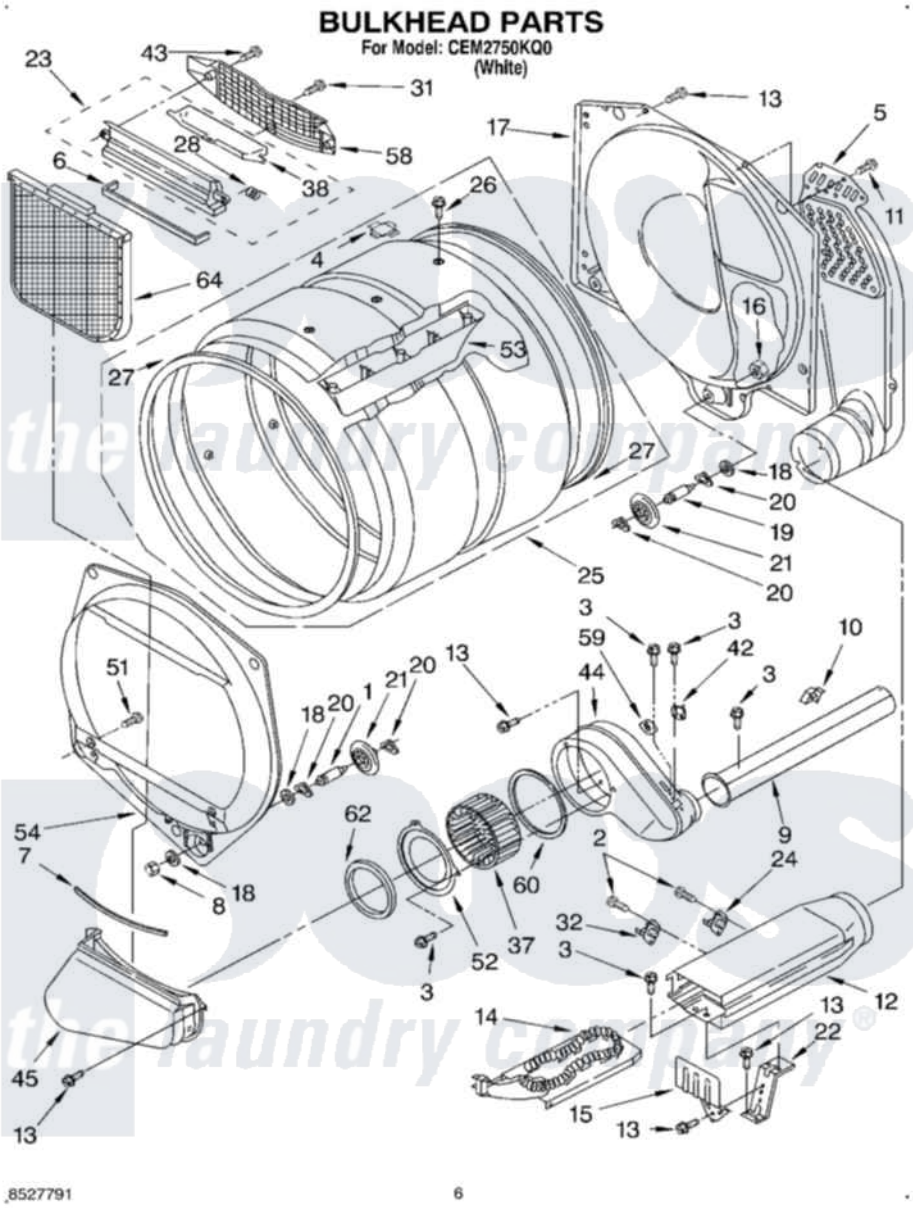

Whirlpool Commercial Whirlpool CEM2750KQ0 Dryer Parts Parts Diagram 04 - BULKHEAD, OPTIONAL
Click on the part number to view part

Item	Original Part Number	Replaced By	Status	Part Description
1	3399508	W10359271		Shaft, Drum Roller Threads
2	90767			Screw, 8A X 3/8 HeX Washer Head Tapping
3	3390646	W10139210		Screw, 8-18 X 5/16
4	8066086			Plug, Drum Hole
5	697354	3387911		Duct-Air
6	697813			Seal, Outlet Housing
7	697814	697813		Seal, Outlet Housing
8	3359452			Nut, Lock
9	8318486	279936		Kit-Exhst
10	3388229			Retainer, Toe Panel
11	693995			Screw, Hex Head
12	3392537			Box, Heater
13	3390647	488729		Screw
14	3387748			Element, Heater
15	697699		Not Available	Shield, Heat
16	3387709			Nut, 3/8-16

17	3387809		Bulkhead, Rear
18	3387459	W10080960	Washer, Support
19	3399509	W10359272	Shaft, Roller Drum Threads
20	690997		Washer, Thrust
21	3396801	W10314173	Support
22	697700	3393471	Bracket, Heater
23	3394985	8563755	Housing, Outlet Assembly
24	3977395	279973	Kit, Thermal Cut-Off
25	8318215	W10197999	Drum
26	97787	W10109200	Screw, Baffle Mounting
27	697694	280114	Seal
28	3394986		Spring, Lint Screen Door
31	487909	488729	Screw
32	3391914		Thermostat 295 F
37	697772		Wheel, Blower
38	3394984	8563758	Door, Lint Screen
42	3387138		Thermostat, Internal-Bias
43	3387230		Screw, 10-16 X 13/16
44	697363	8544363	Housing, Blower
45	3390531	8530036	Lint Duct Assembly
51	3357011	308685	Side Trim)
52	697771	279780	Cover
53	697693	W10113136	Baffle, Drum
54	697557		Bulkhead, Front
58	8299979		Grill, Outlet Screen Door
59	3390719		Thermal-Fuse
60	697770		Seal, Cover Plate Blower Housing
62	697769	8566209	Seal, Transition Duct
64	3390721	W10120998	Screen
"	72017		Paint, Touch-Up
"	350930		Paint, Pressurized Spray B
"	350938		Paint, Pressurized Spray B
"	799344		Paint, Touch-Up)

the laundry company®