Whirlpool CG2951XSW1 05 - 694670 BURNER, WIRING HARNESS

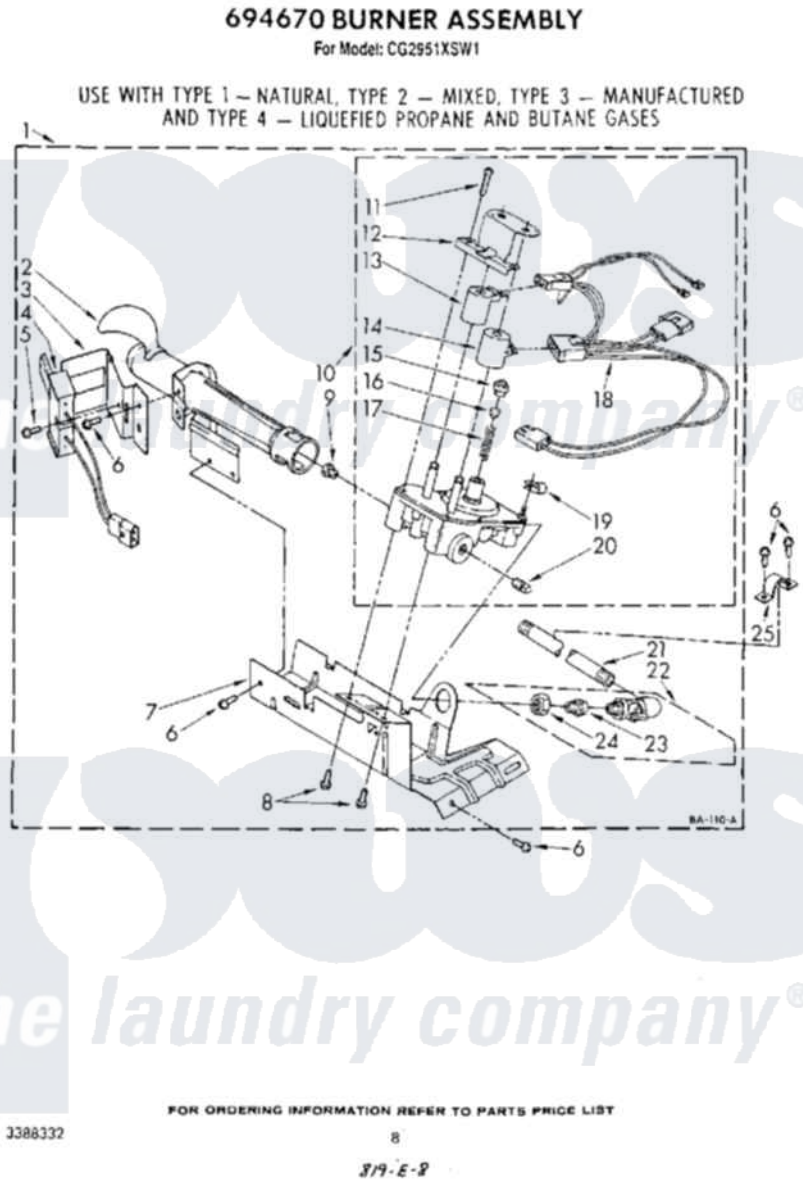

Whirlpool Commercial Whirlpool CG2951XSW1 Dryer Parts Parts Diagram 05 - 694670 BURNER, WIRING HARNESS
Click on the part number to view part

Item	Original Part Number	Replaced By	Status	Part Description
1	694670	W10492502		Burner-Gas
2	688617	693140		Burner
3	694298			Bracket, Ignitor
4	660991	279311		Ignitor
5	686953	3393909		Screw, 8-32 X 7/8
6	343641	681414		Screw, 10AB X 1/2
7	693986			Base, Burner
8	339527	90767		Screw, 8A X 3/8 HeX Washer Head Tapping
9	234826			Orifice, Burner Type 1
"	15775	72017		Paint, Touch-Up
"	15419		Not Available	Orifice, Burner (Type 3)
"	229742			Orifice, Burner
"	234868			Orifice, Burner
10	694054	279923		NAT Gas
11	694421			Screw, Bracket Mounting
12	694538			Bracket, Shunt

13	694540			Coil, 60 Hz
14	694539			Coil, 60 Hz
15	694424			Leak, Limiter
16	694423			Screw, Regulator Adjustment
17	694422			Spring, Regulator
18	694426	3401850		Harness-Gas
19	694510		Not Available	Clip, Harness
20	239822	W10295523		Plug, Pipe
21	233273		Not Available	Pipe, Gas Supply
22	345062			Valve
23	233077	3393767		Pipe, Tail
24	233076			Nut, Compression
25	341029			Clamp, Pipe Door Spring
"	279243			Conversion Kit Type 1 (Natural) To Type 3 (Manufactured)
"	694572	49572A		Conversion Kit To Type L.p.g.f

the laundry company®
the laundry company®