Whirlpool CSP2740KQ1 04 - UPPER CABINET AND FRONT PANEL

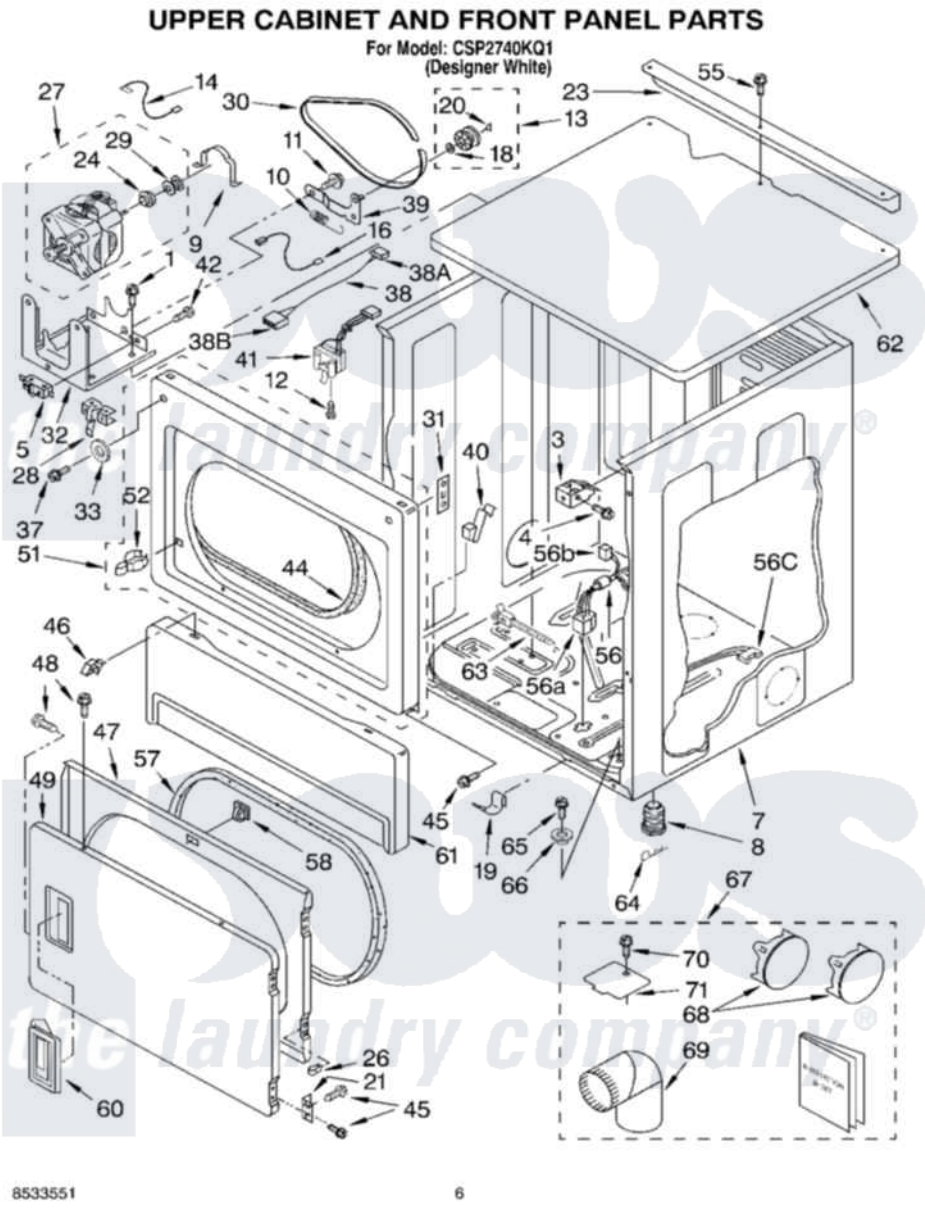

Whirlpool Commercial Whirlpool CSP2740KQ1 Dryer Parts Parts Diagram 04 - UPPER CABINET AND FRONT PANEL
Click on the part number to view part

Item	Original Part Number	Replaced By	Status	Part Description
1	3390663	681414		Screw, 10AB X 1/2
3	3391846			Clip, Front Panel
4	3391915	681615		Screw
5	3394881	279782		Switch-Lid
7	8310656			Cabinet
8	689172			Foot, Dryer
9	660658			Clamp, Motor Mounting 343481 685441
10	3387374			Spring, Idler
11	3389420			Retainer-Idler 1/4-20 X 1/16
12	697773	3395530		Screw
13	3388672	279640		Pulley-Idr
14	3398948			Wire, Jumper
16	3394881	279782		Switch-Lid
18	233520			Washer, Thrust
19	297092			Clip
20	690997			Washer, Thrust

21	3389247		Hinge And Pin Assembly
23	3979115		Bracket, Angle
24	3393657		Restrainer, Belt
26	3389249		Nut, Inner Door
27	661656	W10438970	Motor-Drve
28	3391408	8066120	Lever, Door Switch
29	3389627	W10299847	Pulley-Motor
30	3387610	661570	Belt
31	3390902		Clip, Door Hinge
32	3387118		Bracket, Motor
33	3392186	4159590	Washer
37	3393258	3373329D	Screw
38	8283298		Jumper, Door Switch
"	717253		Receptacle
"	3936144		Do-It-Yourself Repair Manuals
39	3388674	W10118756	Idler Bracket
40	3388600		Clip, Lint Duct
41	3406109	3406107	Door Switch Assembly
42	98129		Screw, 6-20 X 1 1/16
44	3387242		Seal, Front Panel
45	342055	488627	Screw
46	3388229		Retainer, Toe Panel
47	3392563	280083	Door-Rear
48	694091		Trim, Side Right Hand
49	3387872		Door, Front
51	3393081	279722	Panel
52	696144	279570	Latch
55	3390647	488729	Screw
56	3401103		Harness 56A
"	692997		Plug, Multi- Terminal
"	717252		Receptacle, Terminal
"	3395683		Receptacle, Multi-Terminal
57	3390735		Seal, Door
58	3392538	279570	Latch
60	3389522		Handle, Door
61	697215	3406797	Toe Panel
62	3389351		Top
63	3391018		Tie Cable
64	63823		Cotter Pin
65	3400523	285875	Kit, Security
66	3389233		Bushing
67	279818	W10470674	Dryer Exhaust Kit
68	697750	W10470674	Dryer Exhaust Kit
69	279731	49026	4" - 90° Elbow
70	488729		Screw
71	3394331		Plate Cover