Whirlpool CSP2761KQ3 04 - CONTROL PANEL AND SEPARATOR PARTS

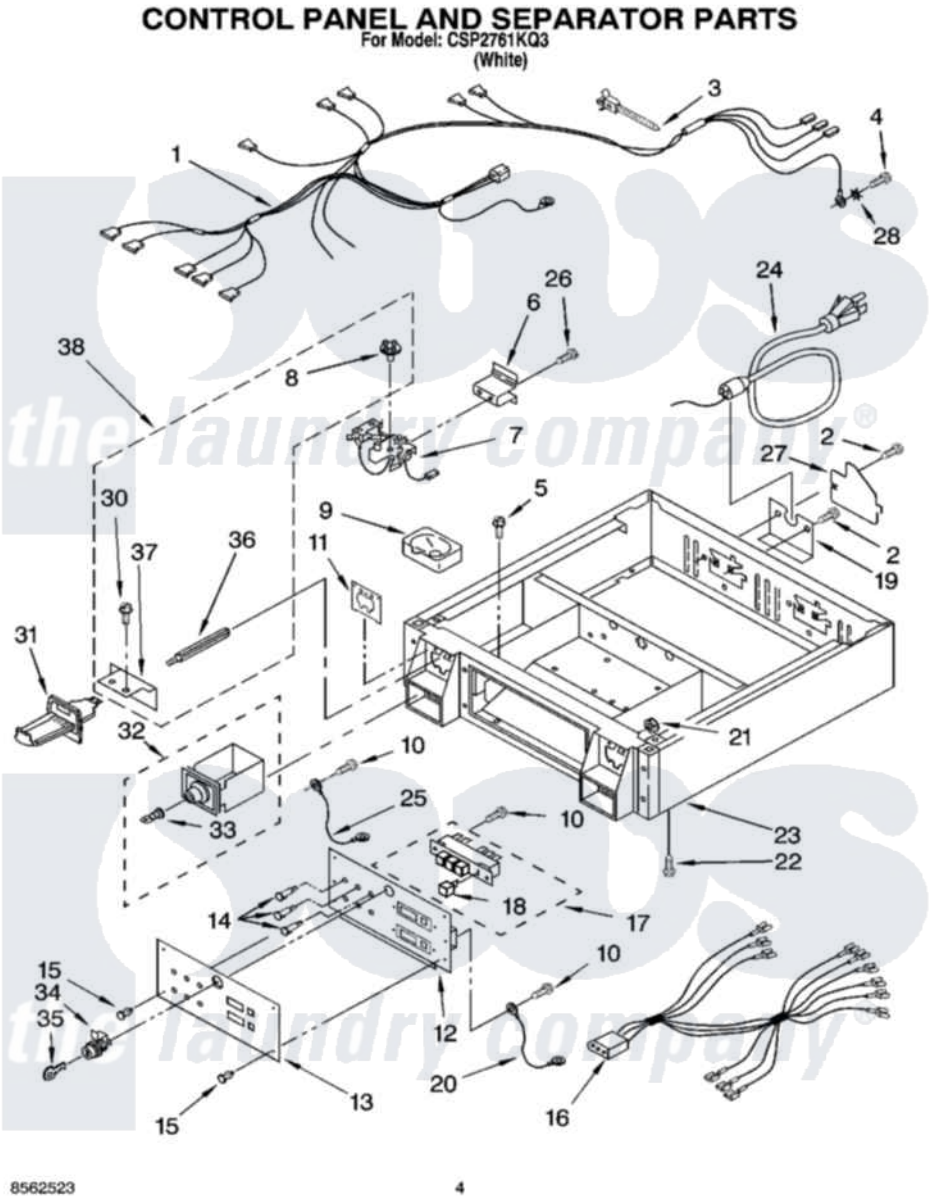

Whirlpool Commercial Whirlpool CSP2761KQ3 Dryer Parts Parts Diagram 04 - CONTROL PANEL AND SEPARATOR PARTS
Click on the part number to view part

Item	Original Part Number	Replaced By	Status	Part Description
1	8283295			Harness, Wire
2	3400000			Screw, 10-24 X 3/8
3	3391018			Tie Cable
4	697776	4331106		Screw, No.10-32 X 7/16
5	98139	303776		Screw
6	3390115			Bracket, Timer
7	3389668	279737		Timer
8	3387974			Timing Cam
NI	339855			Timing Cam
"	343777			Timing Cam
"	339854			Timing Cam
"	339853			Timing Cam
9	385421			Funnel, Coin
10	303921	489128		Screw, 8-32 X 27/64
11	3954761	279950		Funnel
12	3979100			Panel, Control

13	8527831	8565384		Insert, Decorative
14	3979325			Lamp, Indicator
NI	3979326			Lamp, Indicator
"	3979327			Lamp, Indicator
15	354239			Rivet
16	8283296			Wire Jumper
17	8316437	W10330137		Switch, Pushbutton
18	8316433			Pushbutton
19	3390189			Strain Relief
20	8539882	3401699		Jumper Wire
21	3400029			Nut, Adapter Plate
22	3400500			Bolt, 3405245 5/16-18 X 3/4
23	3978853			Collar
24	3401402			Cord, Power
25	3401699			Jumper Wire
26	3400094			Screw, 10-32 X 3/8
27	3396795			Cover, Terminal Block
28	3390443			Retainer, Terminal
30	96435	356418		Screw
31	8316520			Slide Mechanism Inserts
NI	8316264	4396666		Insert
"	8316265	4396667		Insert
32	8316525	4396671		Box
33			Not Available	
34	8316526	4396668		Lock-Cam
35	67001048	67001285		Cover, Light
36	8318517	8576635		Bolt
37	3390424			Extension, Slide
38	3390615			Screw And Cam Bag Assembly
NI	B0592401		Not Available	THERMOSTAT
"	C4889201		Not Available	LINE- SUCT

the laundry company®