Whirlpool CSP2771AW2 01 - LOWER CABINET AND FRONT PANEL

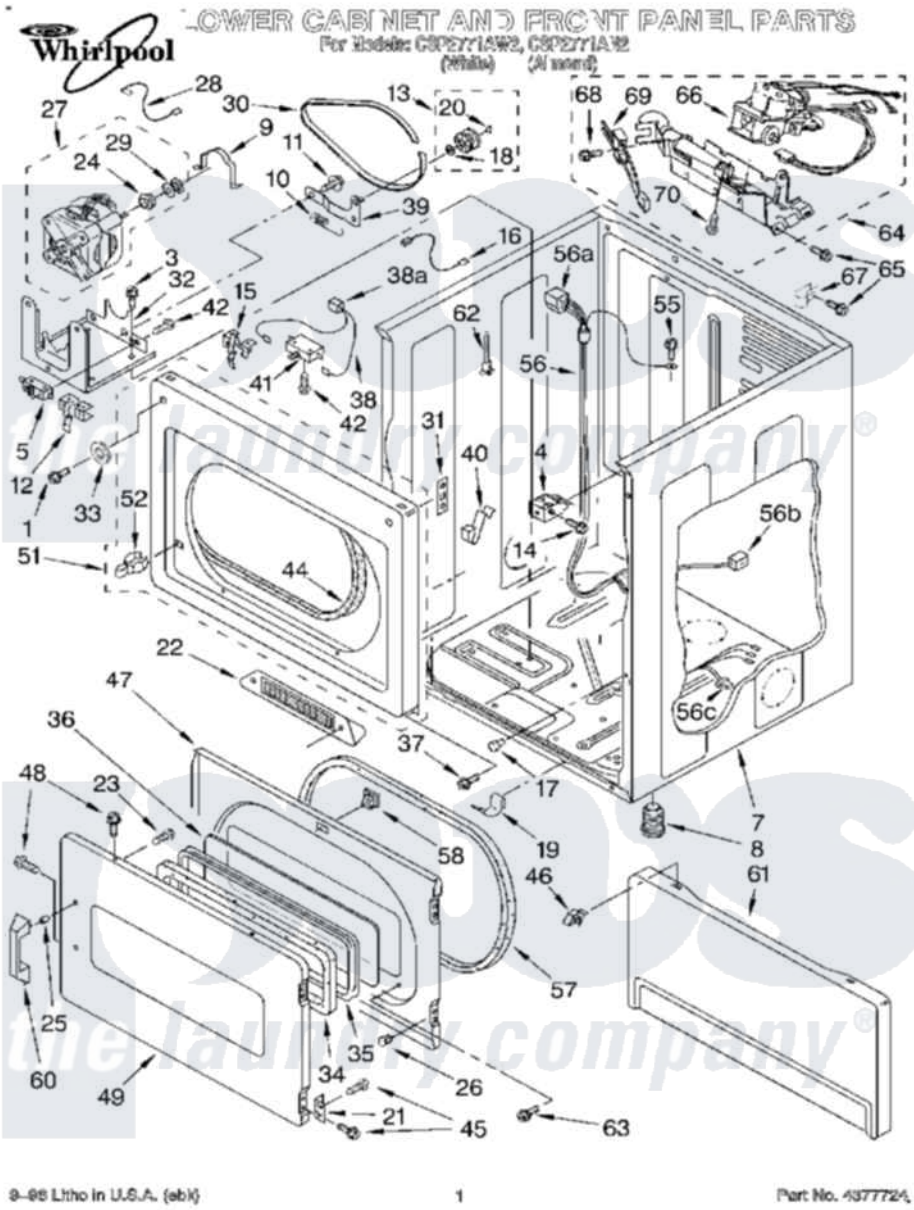

Whirlpool Commercial Whirlpool CSP2771AW2 Dryer Parts Parts Diagram 01 - LOWER CABINET AND FRONT PANEL
Click on the part number to view part

Item	Original Part Number	Replaced By	Status	Part Description
1	3390814	90767		Screw, 8A X 3/8 HeX Washer Head Tapping
3	90767			Screw, 8A X 3/8 HeX Washer Head Tapping
4	3391846			Clip, Front Panel
5	3394881	279782		Switch-Lid
7	3389369	280051		Cabinet
"	3389370		Not Available	Cabinet, Lower (Almond)
8	3392100	49621		Feet-Leveling
9	660658			Clamp, Motor Mounting 343481 685441
10	3387374			Spring, Idler
11	3389420			Retainer-Idler 1/4-20 X 1/16
12	3391408	8066120		Lever, Door Switch
13	3388672	279640		Pulley-Idr
14	3387230			Screw, 10-16 X 13/16
15	691581			Lever, Door Switch

16	3394081			Wire, Broken Belt Switch
17	693152			Bumper, Console
18	233520			Washer, Thrust
19	297092			Clip
20	690997			Washer, Thrust
21	3389247			Hinge And Pin Assembly
22	3391611	3389507		Grill
23	718032			Screw, 8-18 X 3/4
24	3393657			Restrainer, Belt
25	3393933			Fastener
26	3389249			Nut, Inner Door
27	3395656	W10438970		Motor-Drve
28	3398948			Wire, Jumper
29	3389627	W10299847		Pulley-Motor
30	661570			Belt
31	3390902			Clip, Door Hinge
32	3387118			Bracket, Motor
33	3392186	4159590		Washer
34	3392915			Gasket, Window
35	3392914			Frame, Window
36	3392918	3396122		Window Pack. Includes Illustration 15 And 25)
37	3393258	3373329D		Screw
38	3389967			Harness, Door Switch 38a
"	717253			Receptacle
39	3388674	W10118756		Idler Bracket
40	3388600			Clip, Lint Duct
41	347207	279347		Switch-Lid
42	98129			Screw, 6-20 X 1 1/16
44	3387242			Seal, Front Panel
45	342055	488627		Screw
46	3388229			Retainer, Toe Panel
47	3392890	W10244331		Door-Rear
48	694091			Trim, Side Right Hand
49	3392880			Door, Front
"	3392881			Door, Front
51	3393081	279722		Panel
"	3393082	279723		Panel
52	696144	279570		Latch
55	3390647	488729		Screw
56	3401106			Harness 56A
"	3390423		Not Available	Block, Disconnect (12-Way) (Timer) (Use Term. 94613)
"	717252			Receptacle, Terminal
"	691707			Receptacle, 3-Way
57	3390735			Seal, Door
58	3392538	279570		Latch
60	3392906			Handle, Door
"	3392907		Not Available	Handle, Door (Almond)
61	697215	3406797		Toe Panel
"	697216	3406798		TOEPNL AL
62	3391018			Tie Cable
63	697777		Not Available	Screw, 11-16 x 7/8

64	3401797	285904	Burner-Gas
65	3390647	488729	Screw
66	3401775	279923	NAT Gas
67	3387561		Clamp-Pipe
68	3393909		Screw, 8-32 X 7/8
69	686590	279311	Ignitor
70	3387057		Screw, 10-16 X 1/2 Orifice, Burner

the laundry company®
the laundry company®
the laundry company®