# Admiral ADG20L1H 02 - GAS CARRYING (REV. A-C)

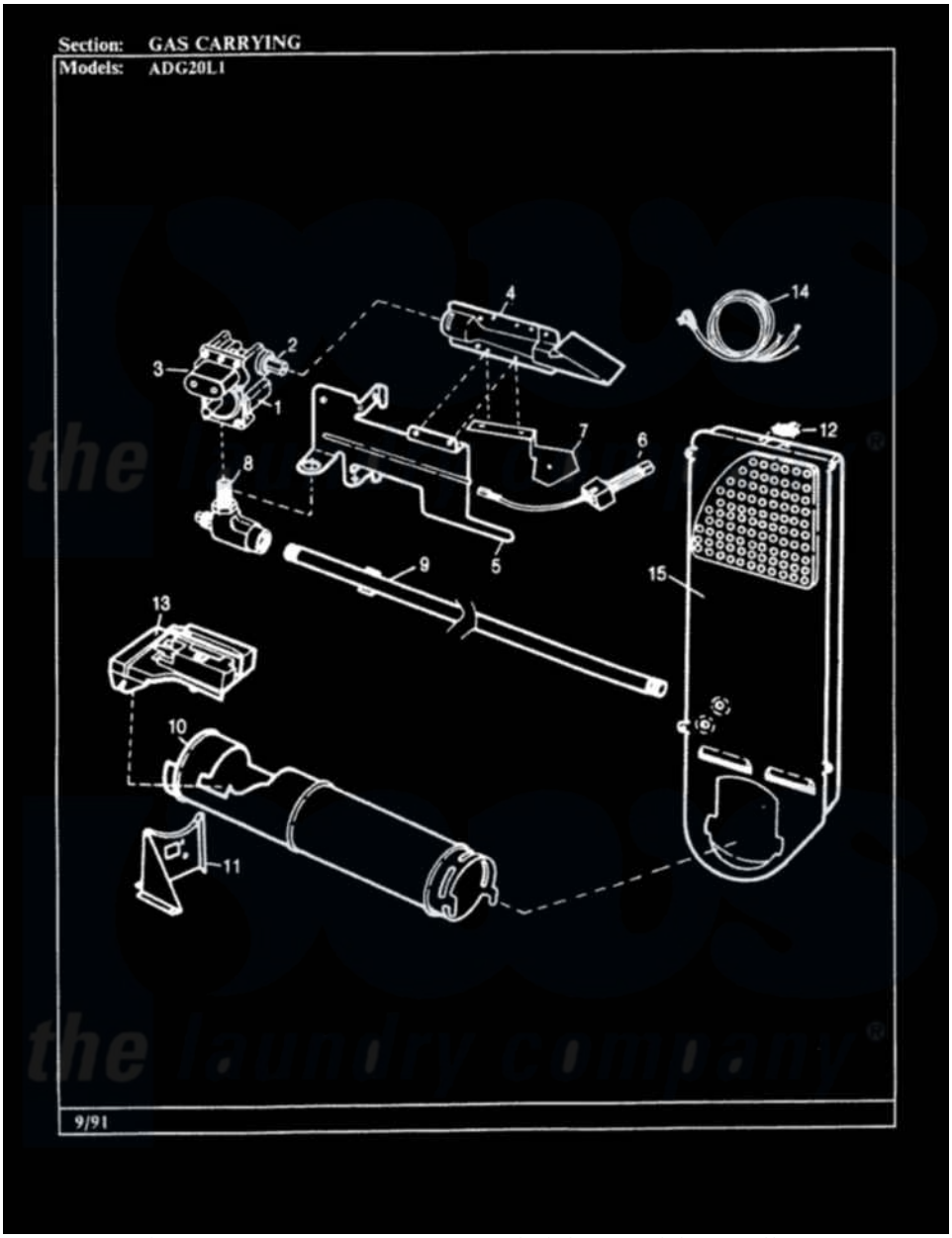


Admiral Residential Admiral ADG20L1H Dryer Parts Parts Diagram 02 - GAS CARRYING (REV. A-C)
Click on the part number to view part

| Item | Original Part Number | Replaced By | Status | Part Description |
|---|---|---|---|---|
| 1 | 53-0194 | 306176 | | Valve, Gas |
| 2 | 63-3570 | | | Burner Orifice |
| 3 | 63-6615 | 279834 | | Coil-Valve |
| " | 63-6614 | 279834 | | Coil-Valve |
| 4 | 63-6682 | 31001784 | | Burner |
| 5 | 53-0140 | | | Mtg Bracket |
| " | 25-7741 | W10116760 | | Screw |
| 6 | 25-3034 | | | Clip, Wiring |
| " | 53-0689 | 31001556 | | Igniter |
| 7 | 25-7744 | 8281196 | | Screw |
| " | 25-2134 | W10116760 | | Screw |
| " | 53-0686 | | Not Available | BRACKET |
| 8 | 53-0101 | 31001042 | | Valve, Gas Shut Off |
| 9 | 53-0173 | 31001777 | | Main Gas L |
| 10 | 53-1884 | | | Housing, Heater |
| " | 25-3032 | | Not Available | WIRING CLIP |

| | | | | |
|---|---|---|---|---|
| 11 | 25-3092 | 90767 | | Screw, 8A X 3/8 HeX Washer Head Tapping |
| " | 25-7741 | W10116760 | | Screw |
| " | 53-0139 | | Not Available | HEATER SUPPORT |
| 12 | 25-0168 | | | Screw |
| " | 53-0143 | LA-1053 | | Fuse Kit, Thermal |
| 13 | 63-5013 | 338906 | | Radiant, Sensor |
| " | 25-2134 | W10116760 | | Screw |
| 14 | 63-6259 | 31001547 | | Cord, Power |
| 15 | 53-0169 | | Not Available | INLET AIR DUCT |
| NI | 12001031 | | | Conversion Kit |
| " | LA-1053 | | | Fuse Kit, Thermal |
| " | 53-1096 | LA-1053 | | Fuse Kit, Thermal |
| " | 63-6766 | | | Conversion Kit |

the laundry company®
the laundry company®
the laundry company®