Admiral AW20K3WS 12 - WATER CARRYING (REV. A-E)

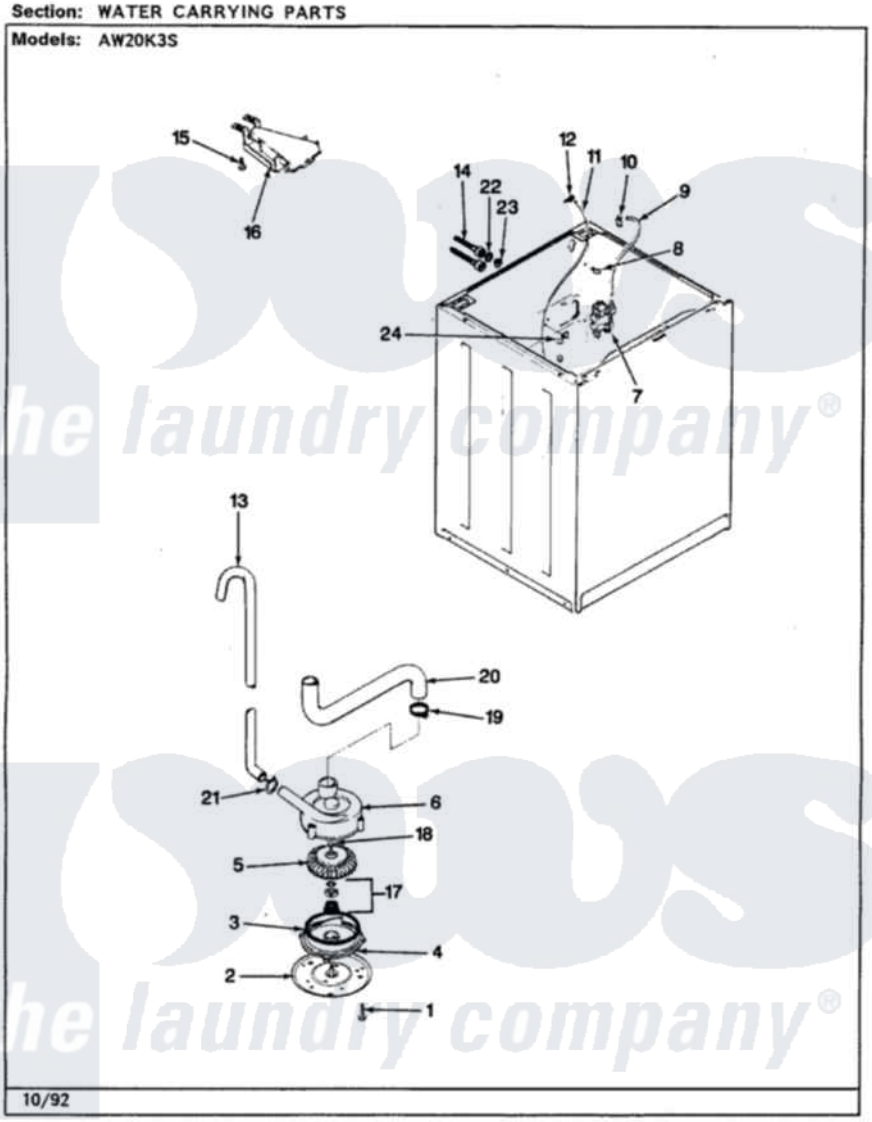

Admiral Residential Admiral AW20K3WS Washer Parts Parts Diagram 12 - WATER CARRYING (REV. A-E)
Click on the part number to view part

Item	Original Part Number	Replaced By	Status	Part Description
1	25-7405	3196164		Screw
2	33-6035		Not Available	PLATE & PULLEY ASSY.
3	33-6032			Gasket
4	35-2058			Base, Pump
5	35-2057	35-6465		Pump Assem
6	35-2099	35-6465		Pump Assem
"	35-2344			Restrictor, Flow
"	35-2056		Not Available	HOUSING, PUMP
7	25-7220			Clip, Cabinet Top
"	35-2374	35-2374N		Valve, Water
8	25-7867	596669		Clamp, Manifold
9	35-2378	12002749		Hose, Flume Kit
10	25-7867	596669		Clamp, Manifold
11	35-2322	21001748		Hose, Pressure Switch
"	35-2261		Not Available	PAD, PRESSURE SWITCH HOSE
12	33-6099			Clamp

13	35-2896	211704		Hose, Drain
14	35-0873	76313		Hosefill
"	33-7046	89503		Hose-Inlet
15	25-3092	90767		Screw, 8A X 3/8 HeX Washer Head Tapping
16	35-2051	21001760		Flume Assembly / Water Diverter
17	35-0707			Seal, Seat And "O" Ring
18	25-7894	W10001180		Screw
19	25-6069		Not Available	CORBIN CLAMP
"	25-6068	285655		Clamp, Hose
20	35-3584	21001915		Hose, Tub To Pump
"	35-2982			Hose Tub To Pump
21	25-7080	285655		Clamp, Hose
22	25-7048			Washer
23	33-7313	33-4264N		Strainer And Washer Kit
24	25-7796	596669		Clamp, Manifold

the laundry company®
the laundry company®