Admiral LDEA300AGE 06 - TUMBLER (LDEA300AGE)

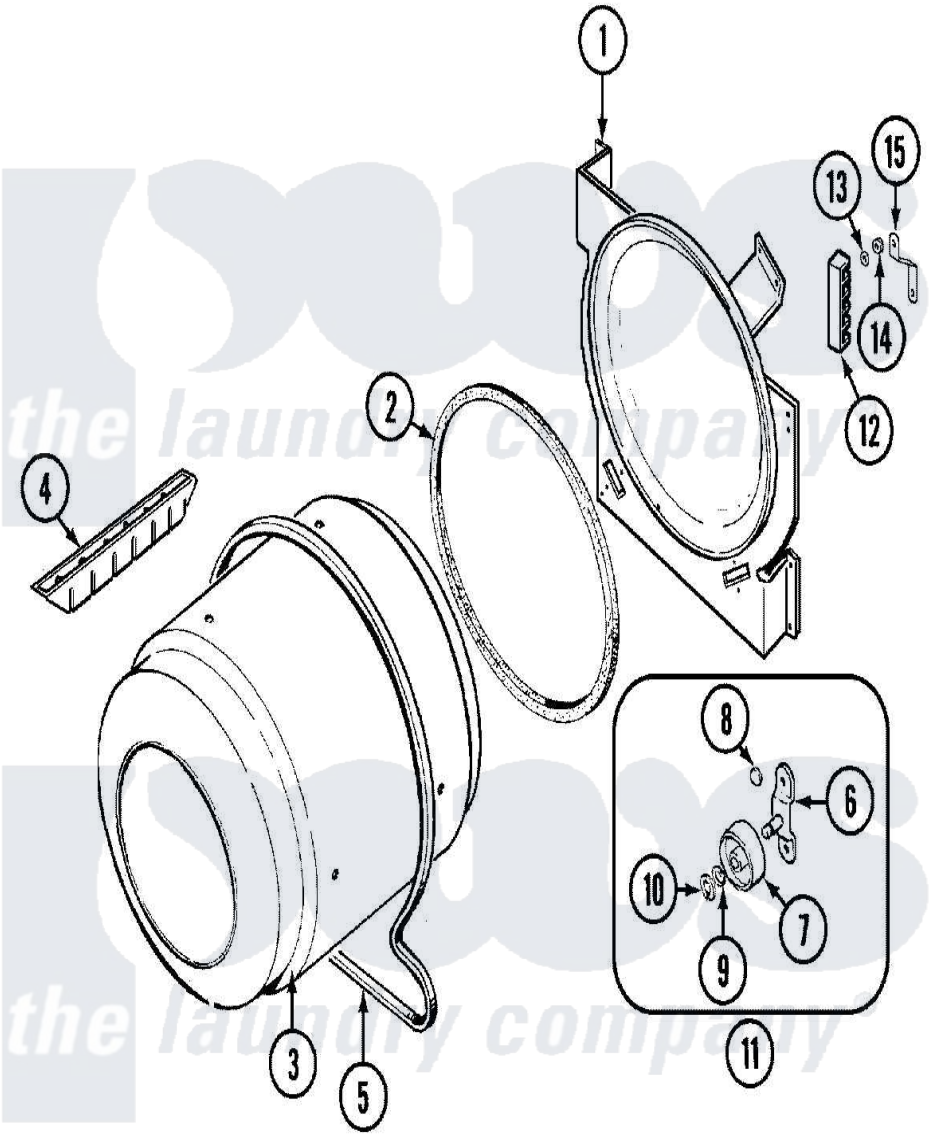

Admiral Residential Admiral LDEA300AGE Dryer Parts Parts Diagram 06 - TUMBLER (LDEA300AGE)
Click on the part number to view part

Item	Original Part Number	Replaced By	Status	Part Description
1	25-7733	681414		Screw, 10AB X 1/2
"	LA-1054			Dryer Bulkhead Kit
2	53-0281	31001747		Seal Assembly
3	53-1250			Cylinder
4	53-1249		Not Available	BAFFLE, WHITE
"	25-7759	3196164		Screw
5	53-1589	341241		Belt
6	53-0197			Support Assembly-Cylinder Rear
"	25-7101	3351614		Screw, Gearcase Cover Mounting
7	53-1578	31001096		Roller
8	25-7813			Spacer
9	25-7814			Washer
10	25-7854			Ring, Retaining
11	LA-1008			Rr Roller Kit
12	53-1518			Block, Terminal

"	25-7952	3400074		Screw
13	25-3122			Washer, Flat
14	25-0027	112432		Nut
"	25-7808	21001837		Nut, Lock W/Nylon Insert
15	53-0965		Not Available	STRAP, GROUND

the laundry company®

the laundry company®

the laundry company®