Amana AE5413 02 - CABINET, EXHAUST DUCT AND BASE

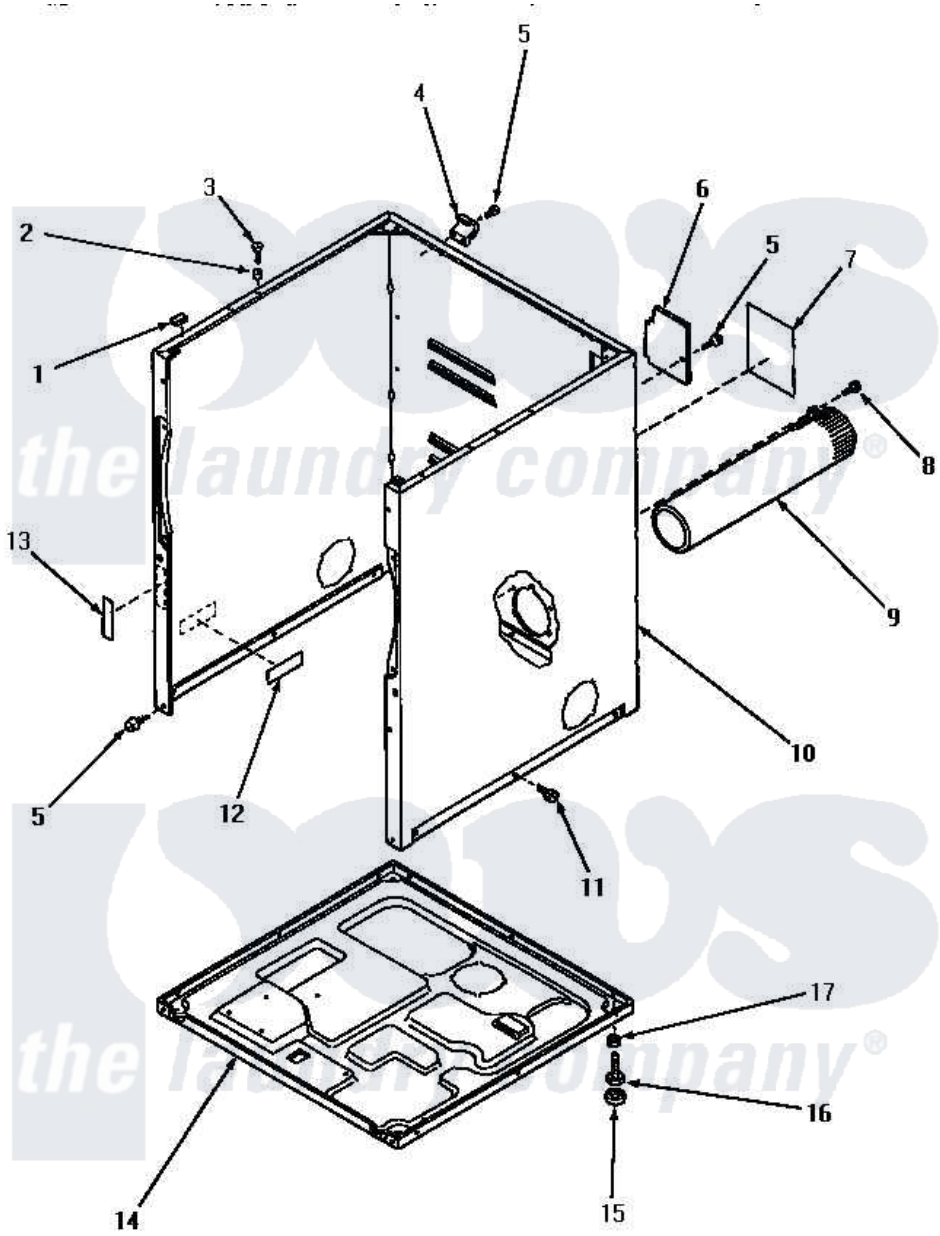

Amana Residential Amana AE5413 Dryer Parts Parts Diagram 02 - CABINET, EXHAUST DUCT AND BASE
Click on the part number to view part

Item	Original Part Number	Replaced By	Status	Part Description
1	Y56128			Pad, Bumper
2	56079	505187		Locator, Panel
3	32671	Y014874		Screw, Idler Arm And Sleeve
4	60826		Not Available	HINGE, TOP
5	25723	27001200		Screw
6	60821			Acess Cover
7	58866		Not Available	STICKER,WARNING-GROUND
8	56392		Not Available	SCREW,8-18 X 3/8 TAPPI
9	56118		Not Available	ASSY, EXHAUST DUCT
10	60813HP		Not Available	ASSY,DRYER CABINET
"	60813LP			Xxxassy, Dryer Cabinet
"	60813WP		Not Available	xxxASSY,DRYER CABINET
11	56264	27001200		Screw
12	61294		Not Available	(ELECTRIC MODELS)
13	24903		Not Available	STICKER,DISCONNECT POW

14	60811		Assembly, Base-Complete
15	70282	Y314137	Foot, Rubber
16	Y52696	Y305086	Adjustable Leg And Nut
17	20274	62739	Nut, Lock