Amana AEM477W 10 - MOTOR, EXHAUST FAN & BELT

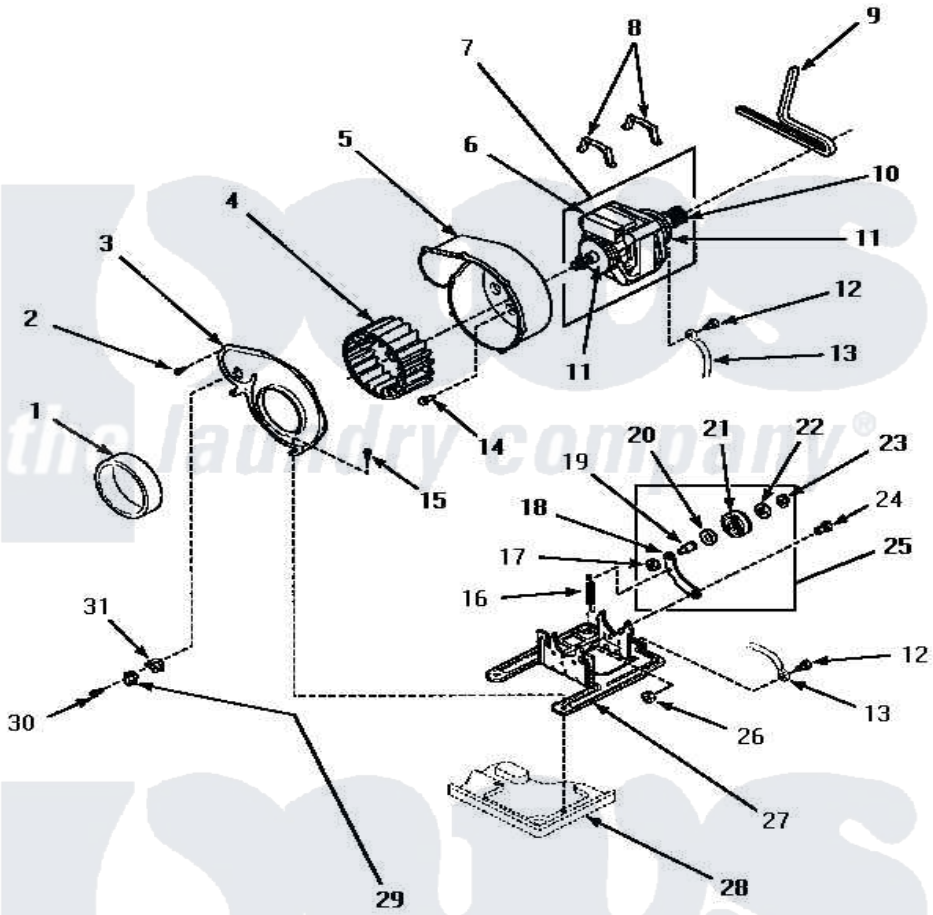

MOTOR, EXHAUST FAN AND BELT

Amana Residential Amana AEM477W Dryer Parts Parts Diagram 10 - MOTOR, EXHAUST FAN & BELT
Click on the part number to view part

Item	Original Part Number	Replaced By	Status	Part Description
1	500313			Seal, Blower Housing
2	31260			Screw, No.8 X 3/8 Ind H
3	500078	511969P		Kit Blower Housing And Cover
4	56000	510139P		Assembly Blower Fan Package
5	56020			Housing, Blower
6	501218		Not Available	MOTOR SWITCH (DOES NOT INCLUDE THERMAL PROT
7	501211	2200376		Motor
8	Y58047	660658		Clamp, Motor Mounting 343481 685441
9	59174	40111201		Belt, Cylinder
10	500011			Pulley, Motor
11	58044A		Not Available	MOUNT,MOTOR-LOCKING
12	20530			Screw, 10-24 x 3/8 Hex
13	Y00000000		Not Available	SEE NOTE GROUND WIRE FROM MOTOR TO MOUNTING BRACKET, GREEN

14	Y31645	27001200		Screw
15	33562	27001200		Screw
16	56076			Spring, Idler
17	56156	358160		Nut
18	500910	37001144		Assembly- Idler
19	56461			Shaft
20	52549			Washer, 501 ID X3/4 Odx
21	Y54414			Assembly, Wheel And Bearing
22	52549			Washer, 501 ID X3/4 Odx
23	23748			Ring, Retaining
24	500824			Screw, 1/4-20 Unc Hex
25	500269	37001287		Assembly, Idler Lever/Shaft/Pulley
26	52566	27001225		Nut, Jam Mid Lock 1/4-20
27	500822	503613		Mount, Motor
28	Y00000000		Not Available	SEE NOTE BASE
29	Y61372			Thermostat
30	501086	90767		Screw, 8A X 3/8 HeX Washer Head Tapping
31	61401	61623		Thermostat, Heater-BR

the laundry company®
the laundry company®