Amana AGE959 06 - GRAPHICS PANEL, CTRL HOOD AND CTRLS

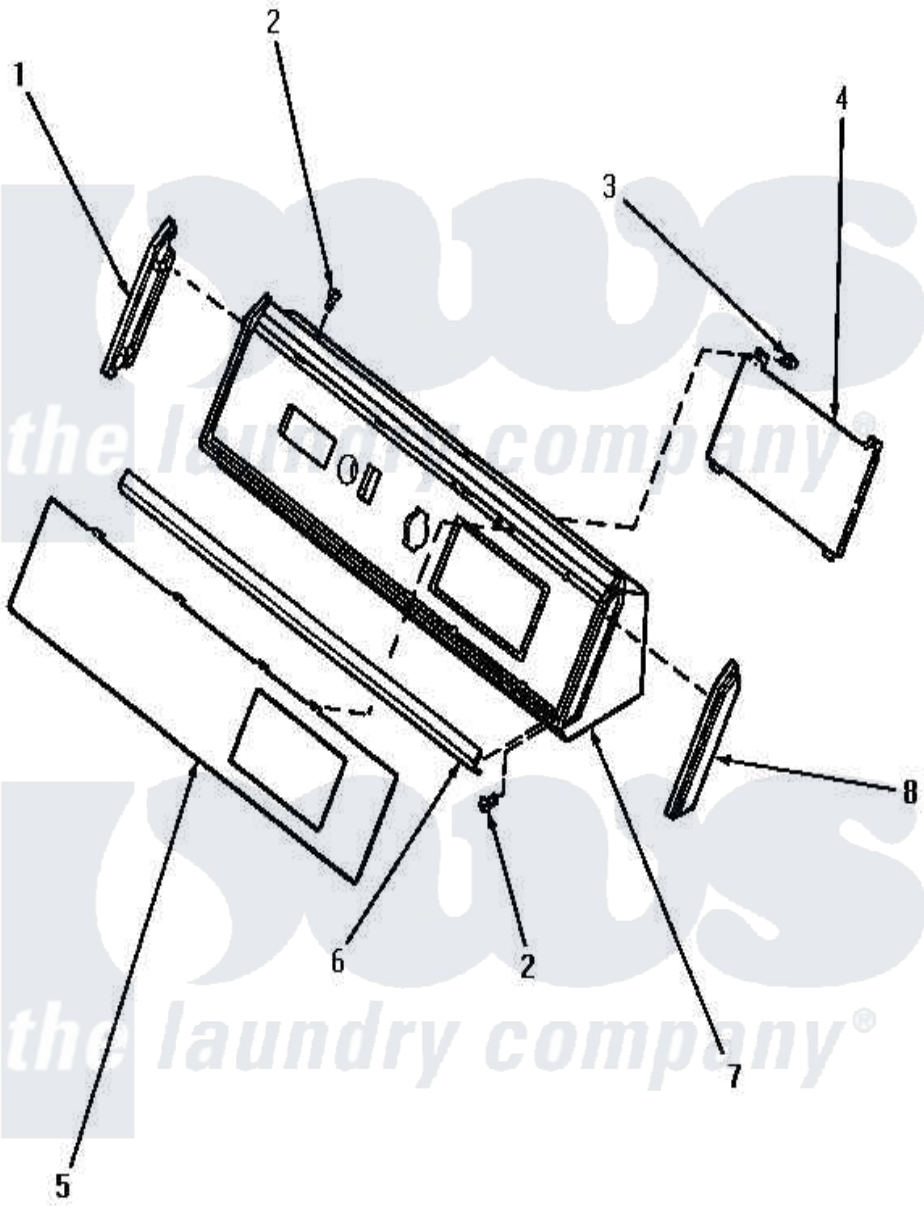

Amana Residential Amana AGE959 Dryer Parts Parts Diagram 06 - GRAPHICS PANEL, CTRL HOOD AND CTRLS
Click on the part number to view part

Item	Original Part Number	Replaced By	Status	Part Description
"	NOTE:		Not Available	NOTE 2: STARTING SERIAL NO. S6564538ZE, ALL HOME LAUNDRY DRYERS WERE MANUFACTURED WITH A NEW CYLINDER ROLLER. IT IS EQUIPPED WITH A LONGER BEARING, SO THE THR
1	31249		Not Available	CAP,END-L.H.-CHROME
2	31752		Not Available	SCREW,No.8ABX3/4 POZIDRI
3	31260			Screw, No.8 X 3/8 Ind H
4	62147		Not Available	ASSY,ELECTRONIC CONTRO
5	62146		Not Available	PANEL,GRAPHIC
6	61849R		Not Available	TRIM, CONT PNL TOP
7	59606		Not Available	HOOD,DRYER-BLACK
8	31248			Cap, End-RH-Chrome
NI	45074	45001		Wire, 18 GA
"	45104		Not Available	18 GAUGE WIRE, PURPLE

"	45103			18 Gauge Wire, Green / Red
"	45100		Not Available	WIRE,18GA-GRN xREPLACE
"	45088	45001		Wire, 18 GA
"	45250		Not Available	WIRE,14GA-WHT
"	45080	45001		Wire, 18 GA
"	45066		Not Available	18 GAUGE WIRE, BLUE / RED
"	45065	45001		Wire, 18 GA
"	45064		Not Available	18 GAUGE WIRE, BLUE / WHITE
"	45061		Not Available	18 GAUGE WIRE, ORANGE / GRAY
"	45060	45001		Wire, 18 GA
"	45053			18 Gauge Wire, Pink / Yellow
"	45083		Not Available	18 GAUGE WIRE, YELLOW / BLACK
"	45251			14 Gauge Wire, Black
"	45255		Not Available	14 GAUGE WIRE, ORANGE
"	45333		Not Available	14 GAUGE WIRE, YELLOW / BLACK
"	Y45037		Not Available	18 GAUGE WIRE, BROWN / WHITE
"	45350		Not Available	14 GAUGE WIRE, GREEN
"	45375	45375LAL		14 Oz Plumbers Putty
"	45377		Not Available	12 GAUGE WIRE, RED
"	45378		Not Available	WIRE,12GA-BRN xREPLACE
"	45380	45-380		Square Drip Pan
"	45381	485760		Thermostat
"	45383		Not Available	WIRE,12GA-YEL xREPLACE
"	45422		Not Available	12 GAUGE WIRE, PINK / BLACK
"	45431		Not Available	WIRE,12GA-ORG/BLK xREPLACE
"	45376		Not Available	WIRE,12GA-BLK xREPLACE
"	45256		Not Available	14 GAUGE WIRE, BLUE
"	Y0045047		Not Available	FALSE DOOR PANEL INSERT W/A
"	45000		Not Available	WIRE,18GA-WHT xREPLACE
"	61590		Not Available	ASSY,WIRING HARNESS
"	Y0045009		Not Available	LEAD WIRES
"	Y0045012		Not Available	SCREW
"	0045014		Not Available	RD HD SCREW
"	45044		Not Available	18 GAUGE WIRE, BROWN / YELLOW
"	0045019		Not Available	CENTER ELEM ASSY
"	45003	45001		Wire, 18 GA
"	0045056		Not Available	DRAWER LINER PK-471
"	0045091		Not Available	ROLLER ARM
"	Y0045258		Not Available	WIRE ASSY EL-RED SWITCHES
"	0045353		Not Available	TOP BURNER ASSY
"	Y0045404		Not Available	CLIP
"	0045475		Not Available	SAIL SWITCH
"	Y0045016		Not Available	PAN HD SCREW
"	45010	45001		Wire, 18 GA
"	45039		Not Available	18 GAUGE WIRE, BROWN / RED

the laundry company®

"	0045480		Not Available	LATCH ASSY
"	45035		Not Available	WIRE,18GA-RED/YEL
"	45029	45029LAL		Mini Tube Cutter
"	45026			18 Gauge Wire, Black / Yellow
"	45022	45001		Wire, 18 GA
"	45001			Wire, 18 GA
"	45011	45001		Wire, 18 GA
"	45002	45001		Wire, 18 GA
"	45008	45001		Wire, 18 GA
"	45007	45001		Wire, 18 GA
"	45006	45001		Wire, 18 GA
"	Y45005		Not Available	18 GAUGE WIRE, ORANGE
"	45004			Wire, 18GA-Pnk xReplace
"	45051		Not Available	18 GAUGE WIRE, PINK / BLUE
"	45015	45001		Wire, 18 GA

the laundry company®
the laundry company®
the laundry company®