Amana ALG643RMW 04 - FRONT BULKHEAD, AIR DUCT & DRUM

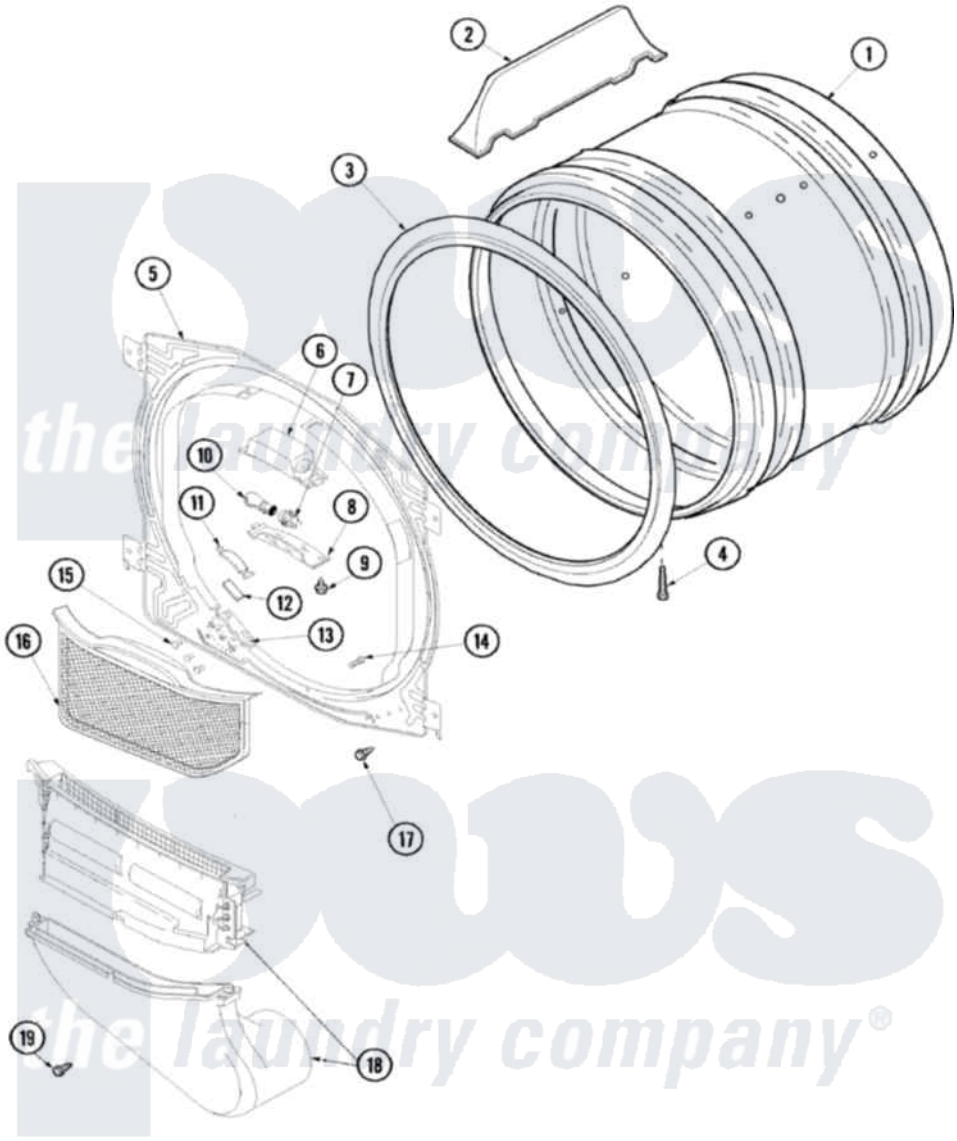

Amana Residential Amana ALG643RMW Dryer Parts Parts Diagram 04 - FRONT BULKHEAD, AIR DUCT & DRUM
Click on the part number to view part

Item	Original Part Number	Replaced By	Status	Part Description
1	504468P		Not Available	CYLINDER ASSEMBLY (STAINLESS)
2	503703	12002559		Baffle Kit
3	501801	37001132		Seal, Cylinder
4	Y62588			Screw, 10BT-12 X 1 Tap
5	503616WP			Assembly, Frt Bulkhead
6	503622	Y504452		Light Assembly
7	Y504452			Light Assembly
8	40094301			Lens, Light
9	500227	505295		Screw, No.8ab-16 x 3/4 PH
10	Y60954	67001316		Bulb, Light
11	40116501	37001298		Glide- Dry
12	500121	510189		Pad Felt
13	37001036			Bracket, Cylinder Glide
14	500226			Screw, 8b-16 x 5/8 Tap
15	37001031	3370225		Screw
16	40124401	37001142		Filter, Lint

17	503688		Screw, 10B-16 X .34 l
18	Y504806	37001141	Air Duct Assembly
19	501285		Screw, No.12 X 9/16-Pla