Amana AWM290W 06 - FRONT PANEL, BASE & CABINET ASSY

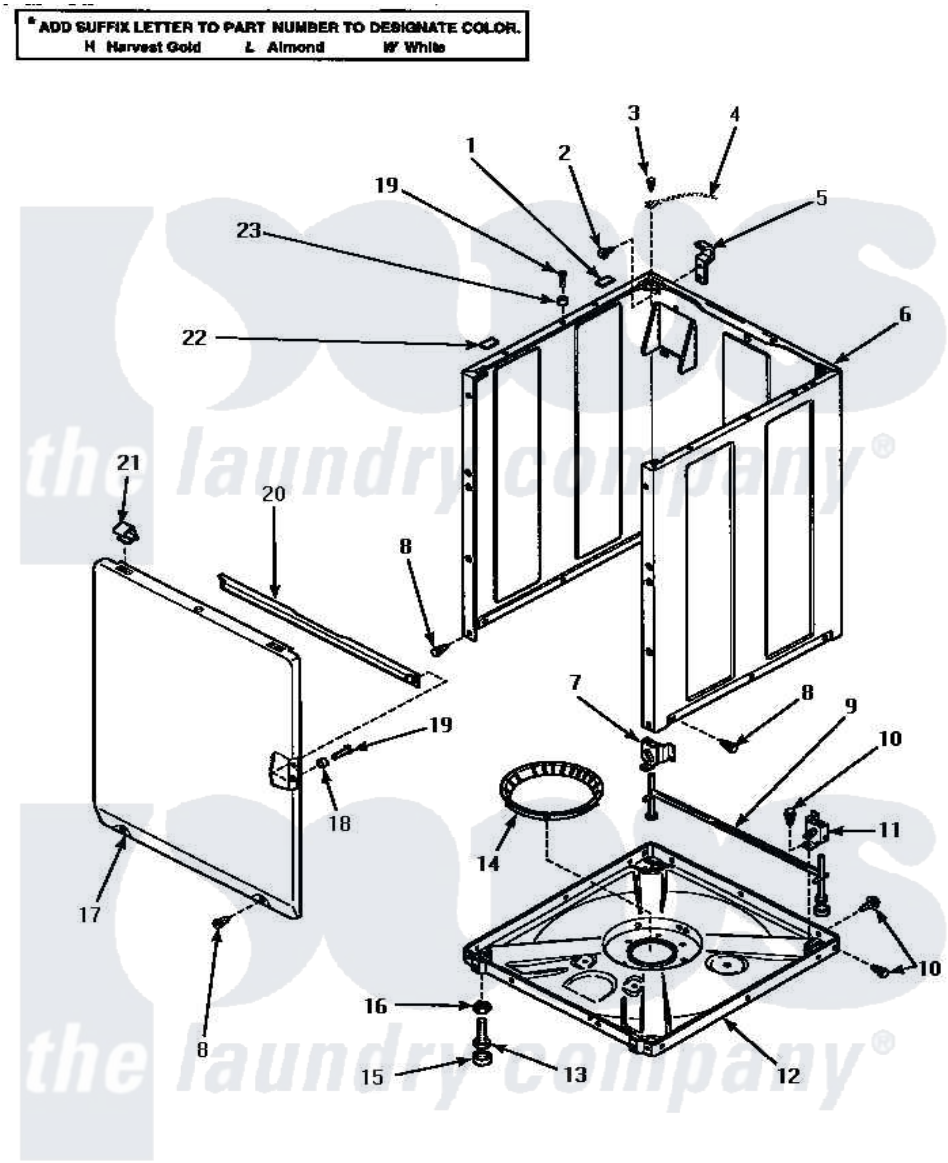

FRONT PANEL, BASE AND CABINET ASSEMBLY

Amana Residential Amana AWM290W Washer Parts Parts Diagram 06 - FRONT PANEL, BASE & CABINET ASSY
Click on the part number to view part

Item	Original Part Number	Replaced By	Status	Part Description
1	36226			Pad, Bumper .25
2	34499		Not Available	SCREW, No.10B X 1/4 TAP IN HX
3	56392		Not Available	SCREW,8-18 X 3/8 TAPPI
4	Y00000000		Not Available	SEE NOTE GROUND WIRE, GREEN
5	Y27103			Hinge, Hold-Down Lug
6	34475WP	38612WP		Kit-Servic
"	34475LP	38612LP		Kit Service Cabinet
"	34475HP		Not Available	KIT,SERVICE CABINET
7	36037			Bracket, Sll-Left
8	27196	27001200		Screw
9	34443			Assembly, Leg And Stabilier
10	35148		Not Available	SCREW,1/4-14 X 3/8 HX HD
11	36036		Not Available	BRACKET,SLL-RIGHT
12	34434P			Assembly Nut/Leg Base
13	Y34319	22003428		Leg, Adjustable

14	36108		Not Available	SNUBBER PAD & ISOLATOR
15	34318	40016001		Foot, Rubber
16	Y21899	40038101		Nut, Leg
17	34656HP		Not Available	ASSY,FRONT PANEL
"	34656WP			Assembly, Front Panel
"	34656LP			Assembly, Front Panel
18	28102			Locator, Panel
19	32671	Y014874		Screw, Idler Arm And Sleeve
20	Y35097		Not Available	BRACE, FRT PNL
21	35865			Clip, Hold-Down Front Panel
22	Y56128			Pad, Bumper
23	56079	505187		Locator, Panel

the laundry company®
the laundry company®
the laundry company®