Amana AWM393L2 (BOM: PAWM393L2) 09 - GRAPHIC PANEL, CONTROL HOOD AND CONTROLS

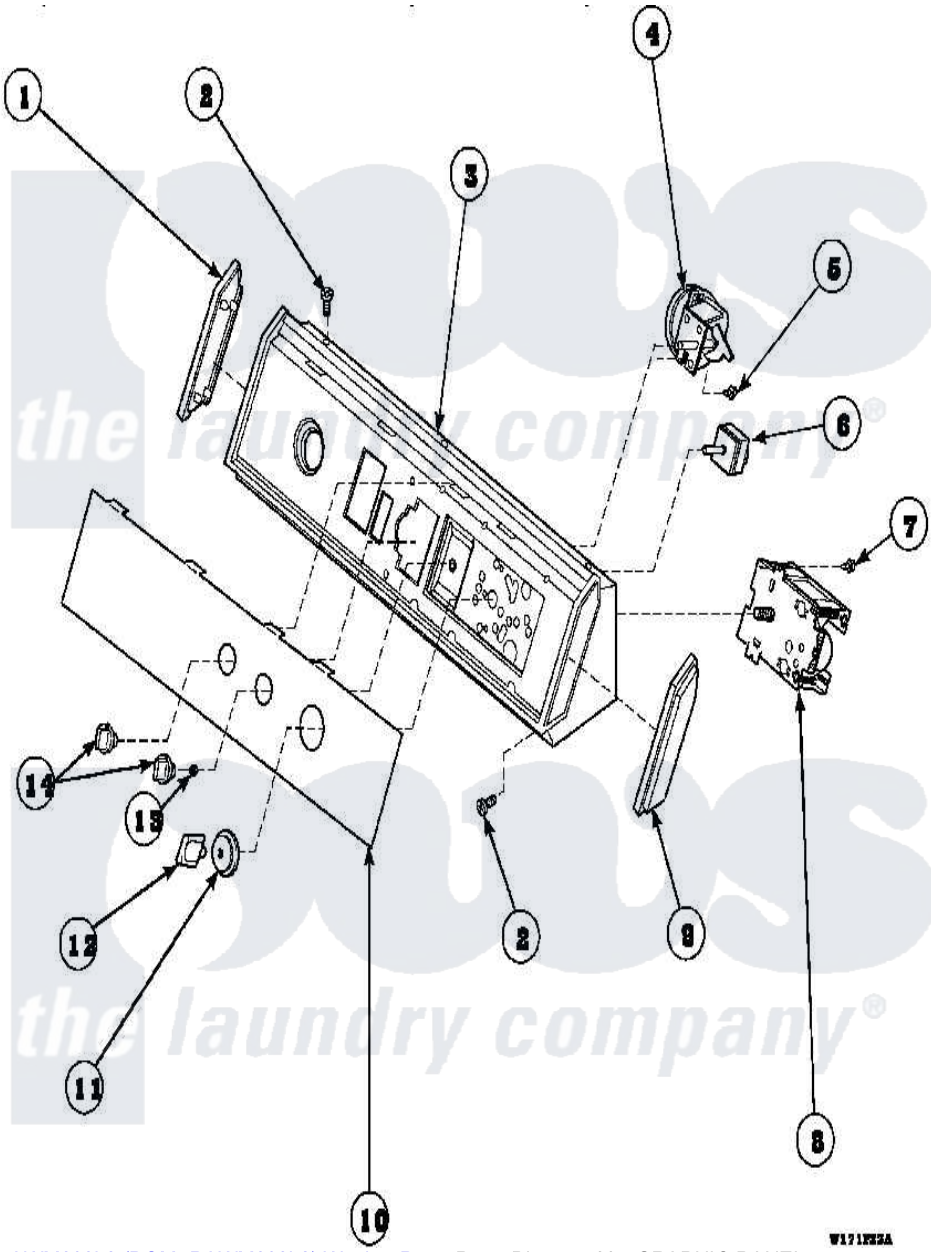

Amana Residential Amana AWM393L2 (BOM: PAWM393L2) Washer Parts Parts Diagram 09 - GRAPHIC PANEL, CONTROL HOOD AND CONTROLS
Click on the part number to view part

Item	Original Part Number	Replaced By	Status	Part Description
1	31249		Not Available	CAP,END-L.H.-CHROME
4	36045	40055101		Switch, Pressure
5	31260			Screw, No.8 X 3/8 Ind H
6	35115			Switch, TemPerature 3 P
7	23962	W10116760		Screw
8	31239	31239P		Timer 3 Cycle Package
9	31248			Cap, End-RH-Chrome
13	57584		Not Available	NUT