Amana AWM432 01 - 33227 TRANSMISSION ASSY COMPONENTS

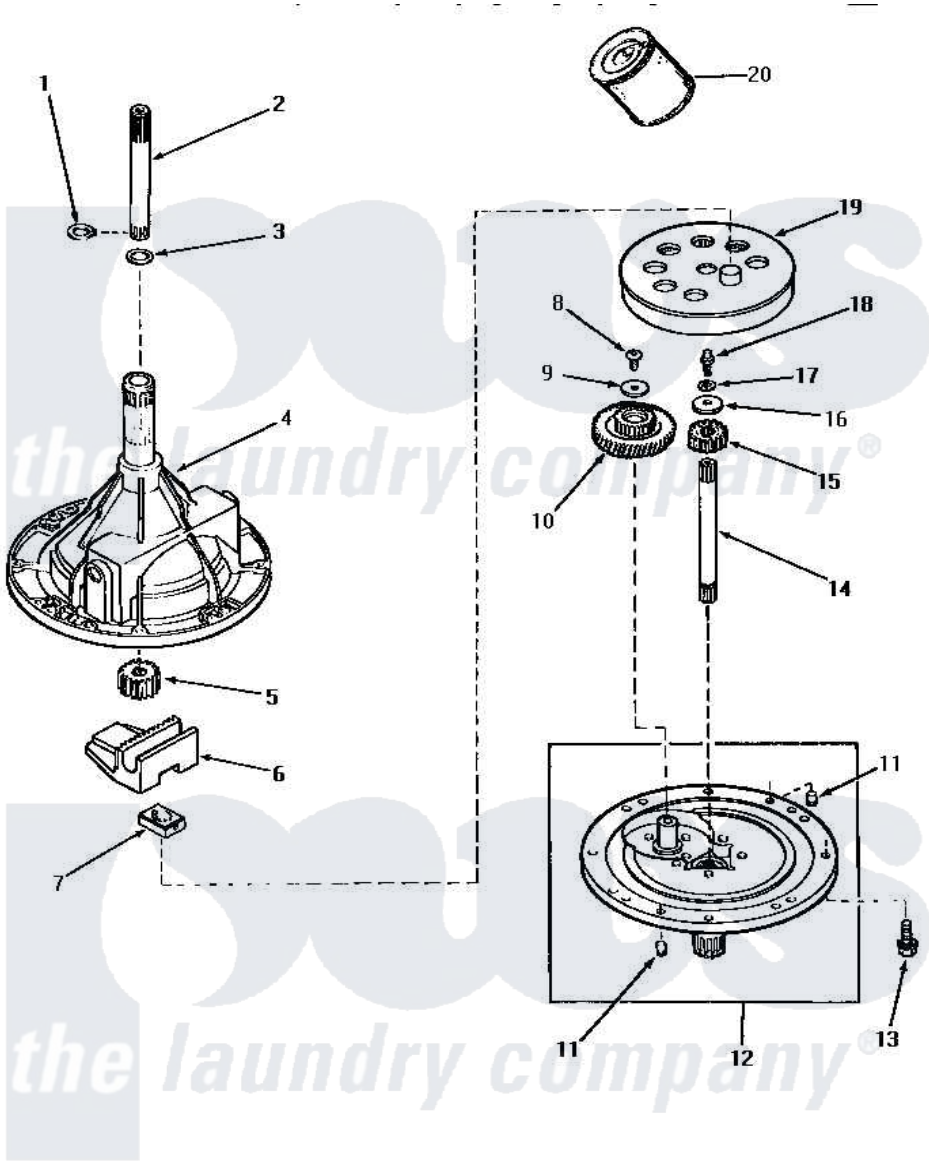

COMPONENTS FOR 33227 TRANSMISSION ASSEMBLY

Amana Residential Amana AWM432 Washer Parts Parts Diagram 01 - 33227 TRANSMISSION ASSY COMPONENTS
Click on the part number to view part

Item	Original Part Number	Replaced By	Status	Part Description
1	27197			Ring, Retaining
2	29134	Y36570		Shaft, Output
3	20212	35092		Washer, 3628id X 1.00 X .056
4	33223		Not Available	ASSY,TRANSMISSION CASE
5	27003			Pinion, Agitator
6	Y31526			Rack
7	26493			Slide
8	29273			Screw, 1/4-20 X 3/8
9	29260		Not Available	WASHER
10	29161			Gear, Reduction
11	27172			Pin, Dowel
12	33214		Not Available	TRANSMISSION COVER ASSEMBLY
13	32814		Not Available	SCREW,1/4-20X7/8 SERRA
14	27081	27081P		Shaft Input Package
15	Y29160			Pinion, Drive
16	26509	40041501		Washer

17	21456		Lockwasher, 1/4 Intshkp
18	27030	Not Available	SCREW,1/4-20 SPECIAL
19	26577		Assembly, Gear And Stud
20	27243P		Oil, CW Transmission F-
NI	28434P	Not Available	LOCTITE

the laundry company®
the laundry company®
the laundry company®