Amana CG8409W (BOM: PCG8409W) 04 - FR BLKHD, AIR DUCT, FELT SEAL & CYLINDER

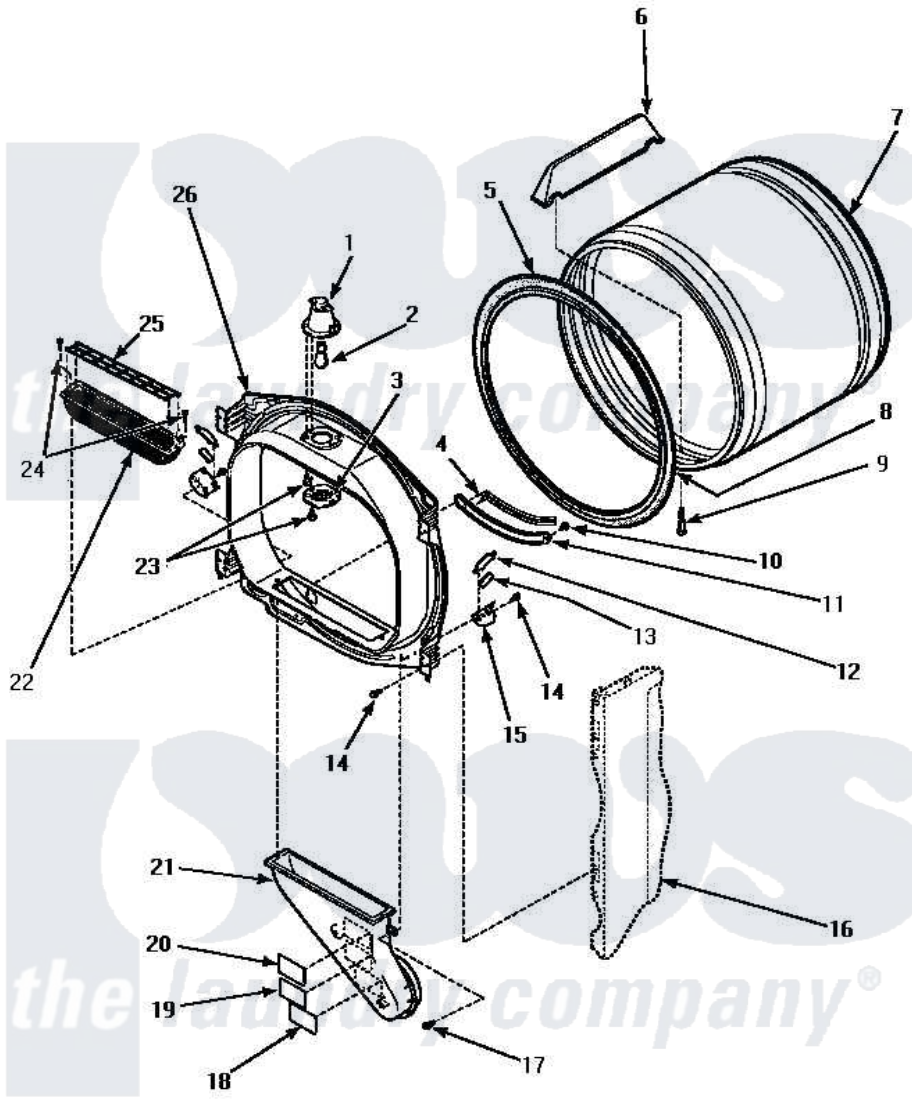

FRONT BULKHEAD, AIR DUCT, FELT SEAL AND CYLINDER

Amana Residential Amana CG8409W (BOM: PCG8409W) Dryer Parts Parts Diagram 04 - FR BLKHD, AIR DUCT, FELT SEAL & CYLINDER
Click on the part number to view part

Item	Original Part Number	Replaced By	Status	Part Description
1	500153		Not Available	CYLINDER LIGHT HOUSING
2	Y60954	67001316		Bulb, Light
3	500094		Not Available	LENS,DRUM LIGHT
5	501801	37001132		Seal, Cylinder
6	500022	510102		Baffle- SH
7	500013WP		Not Available	ASSY,CYLINDER-HOME-
8	22506P	511637P		Adh Dow 737 Clr 3 Oz Tube
9	Y62588			Screw, 10BT-12 X 1 Tap
10	501668	503688		Screw, 10B-16 X .34 l
11	501246		Not Available	MOUNTING,MOISTURE SENSOR
12	Y501676	37001298		Glide- Dry
13	500121	510189		Pad Felt
14	501668	503688		Screw, 10B-16 X .34 l
15	501554	12002090		Bracket

16	Y00000000		Not Available	SEE NOTE CABINET
17	Y31645	27001200		Screw
18	56259		Not Available	STICKER
19	500049		Not Available	STICKER
20	500314		Not Available	LABEL, WARNING
21	500241		Not Available	DUCT, HEAT
22	502093	502140P		Filter, Lint Kit
"	502140P			Filter, Lint Kit
23	500248	M0211530		Screw-SM No.8-18 X 3/8"
24	500226			Screw, 8b-16 x 5/8 Tap
25	502092			Cover, Lint Filter
26	500016W			Assembly, Bulkhead Front Complete

the laundry company®
the laundry company®
the laundry company®