Amana DA3210 10 - CONTROL PANEL, CONTROL HOOD & CONTROLS

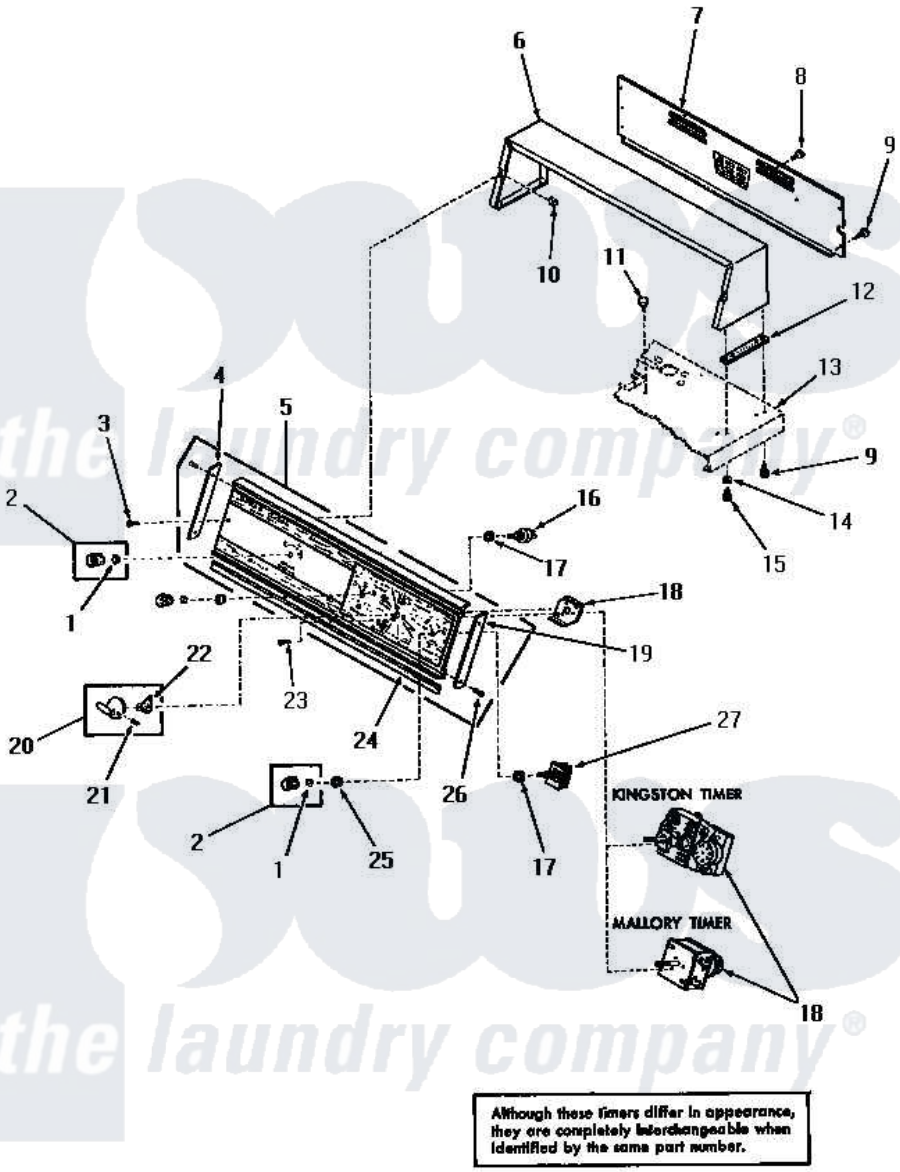

CONTROL PANEL, CONTROL HOOD AND CONTROLS

Amana Residential Amana DA3210 Washer Parts Parts Diagram 10 - CONTROL PANEL, CONTROL HOOD & CONTROLS
Click on the part number to view part

Item	Original Part Number	Replaced By	Status	Part Description
1	22244		Not Available	CLIP,C xREPLACE
2	22245		Not Available	xREPLACE
3	25232		Not Available	SCREW,8AB-18X7/8 OVAL
4	25072		Not Available	END CAP, LEFT
5	25075	Y02100167		Panel Cntr
6	22881W		Not Available	CONTROL HOOD, WHITE
"	22881H		Not Available	CONTROL HOOD, HARVEST GOLD
"	22881A		Not Available	CONTROL HOOD, AVOCADO
7	22890GR		Not Available	CONTROL HOOD REAR COVER, GRAY
8	23222	3177991		Screw
9	25724		Not Available	HEX HEAD SCREW
10	54038			NUt, Speed U-Type
11	21393	21-393		Piezo Sounder
12	23028		Not Available	GASKET,CONTROL BOX END

13	Y00000000		Not Available	SEE NOTE CABINET TOP
14	20493			Washer, 11/64 ID x 3/8 OD
15	52150	489464		Screw
16	21300		Not Available	SWITCH,TEMPERATURE
17	91176			Lockwasher, 3/8 Intshkp
18	25966		Not Available	SPACER,TIMER
"	24828		Not Available	TIMER
19	25073		Not Available	END CAP, RIGHT
20	24858		Not Available	ASSY,KNOB-TIMER
21	25285		Not Available	SETSCREW
22	24857		Not Available	INDICATOR
23	20272		Not Available	PHILLIPS HEAD SCREW
24	25071		Not Available	GASKET
25	24205			Nut, Knurled 3/8-24
26	52864	500226		Screw, 8b-16 x 5/8 Tap
27	21302			Switch, Motor-2SP

the laundry company®
the laundry company®