Amana DA3690 02 - AGITATOR POST AND SPIN TUB

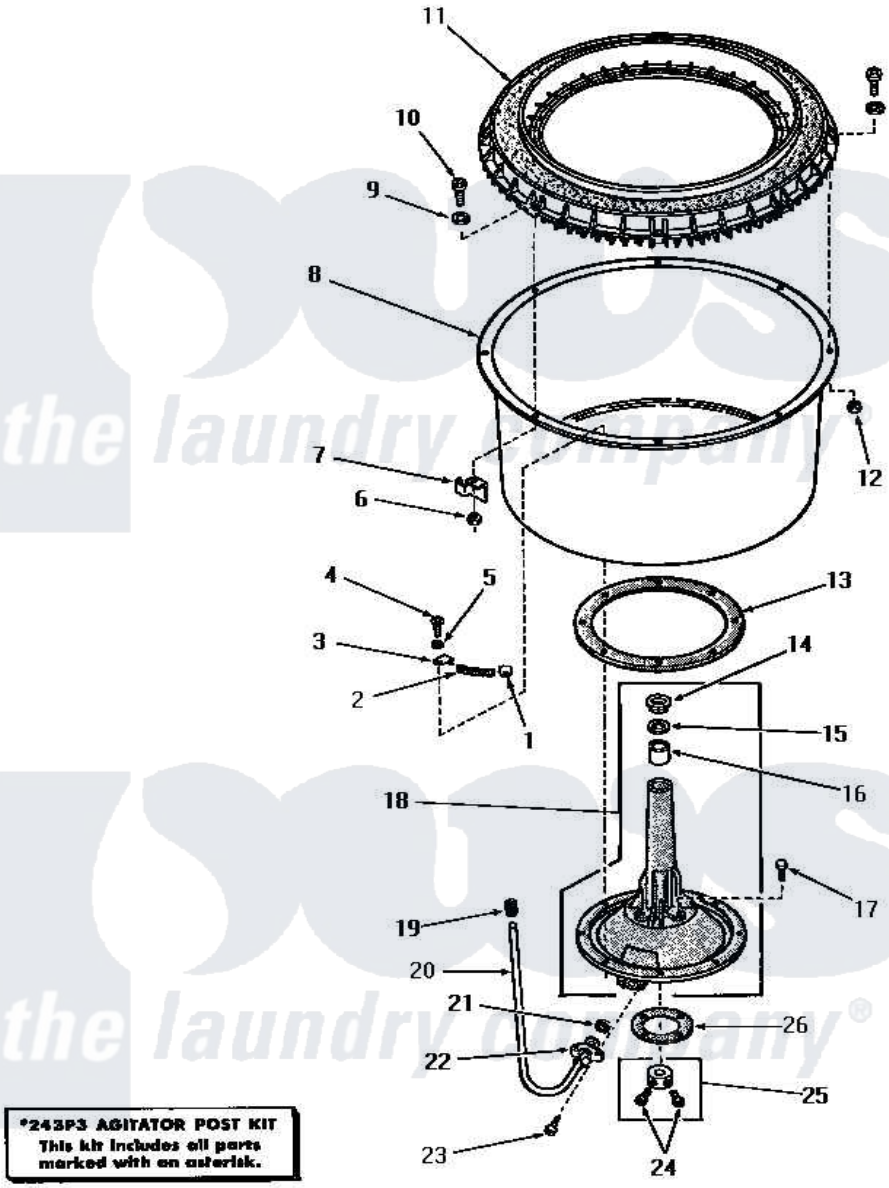

Amana Residential Amana DA3690 Washer Parts Parts Diagram 02 - AGITATOR POST AND SPIN TUB
Click on the part number to view part

Item	Original Part Number	Replaced By	Status	Part Description
1	22446			Clip
2	22144			Spring
3	22447			Clip
4	20260			Screw, 5/16-18 X 3/4 RD
5	20121		Not Available	GASKET
6	26678			Nut, Self-Locking
7	22025			Bracket
8	22382		Not Available	TUB,SPIN
9	25100			Washer, 17/64 ID x 1/2 OD
10	25251	EZ25251		25 x 25 x 1 Filter 1 Metal Side
11	24931		Not Available	BALANCE RING
12	25250			Nut, 1/4-20 Hex Nyllock
13	20122			Gasket
14	23685			Bearing
15	23684			Seal
16	23686			Bearing

17	20261			Screw, Cap
18	23993		Not Available	ASSY,CENTER COLUMN
19	22351			Sleeve
20	22359			Tube, Sediment
21	20110			Gasket
22	26046			Bracket, Sediment Tube
23	20852		Not Available	SCREW,10-24 X 1/2 HEX
24	23481	02422		Screw, 1/4-20 X 1/2 HeX
25	20377			Collar Assembly
26	20120			Gasket

the laundry company®
the laundry company®
the laundry company®