Amana DA3690 03 - AGITATOR, SHAFT & FABRIC SOFTENER DISP

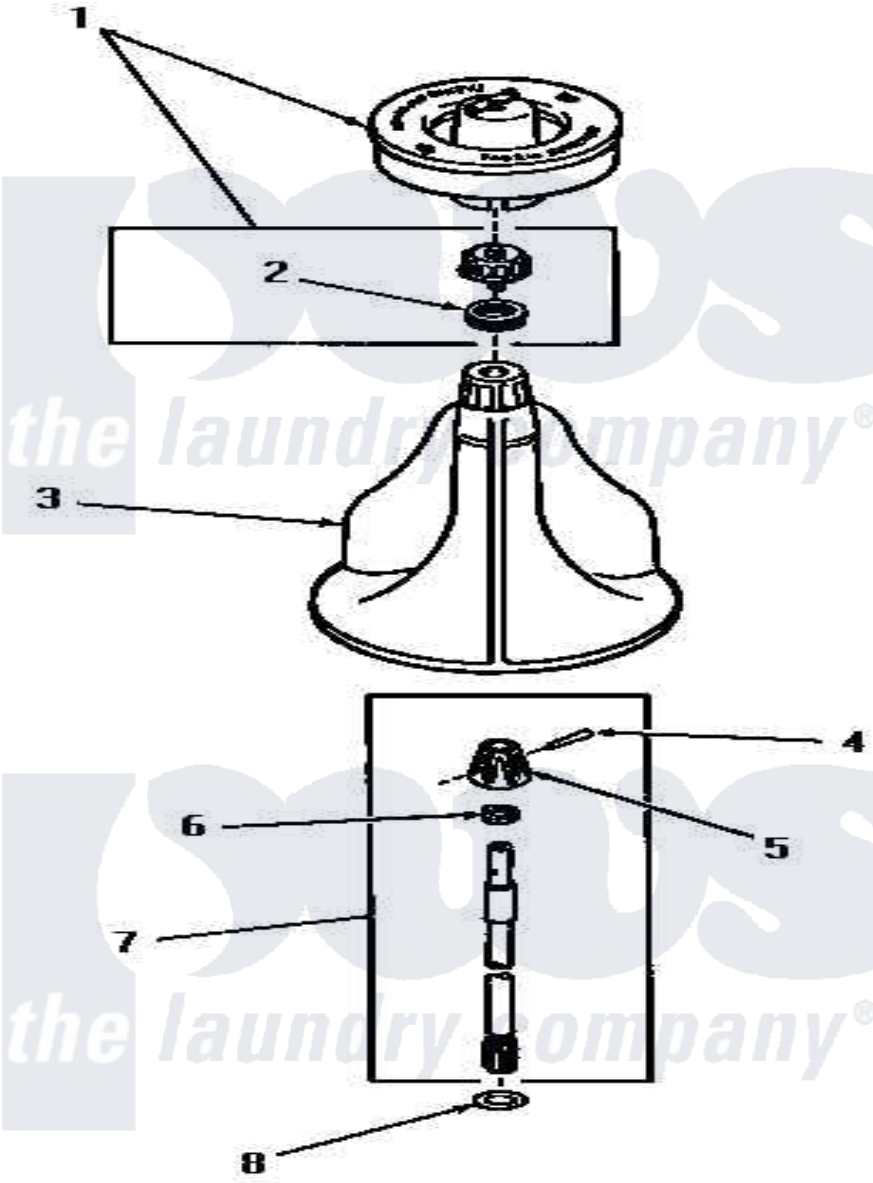

Amana Residential Amana DA3690 Washer Parts Parts Diagram 03 - AGITATOR, SHAFT & FABRIC SOFTENER DISP
Click on the part number to view part

Item	Original Part Number	Replaced By	Status	Part Description
1	26014			Assembly, Cap And Ring-Agitator
2	20136			Ring
3	26006			Assembly, Agitator
4	20243			Pin, Taper
5	20056		Not Available	BLOCK, DRIVE
6	20057	222T017P01		Washer FIB 21/32 ID X 1156 OD X 1/8
7	21751	21751P		Assyshaft
8	22135			Washer