Amana DE3271 10 - DRUM LIGHT & COVER PLATE

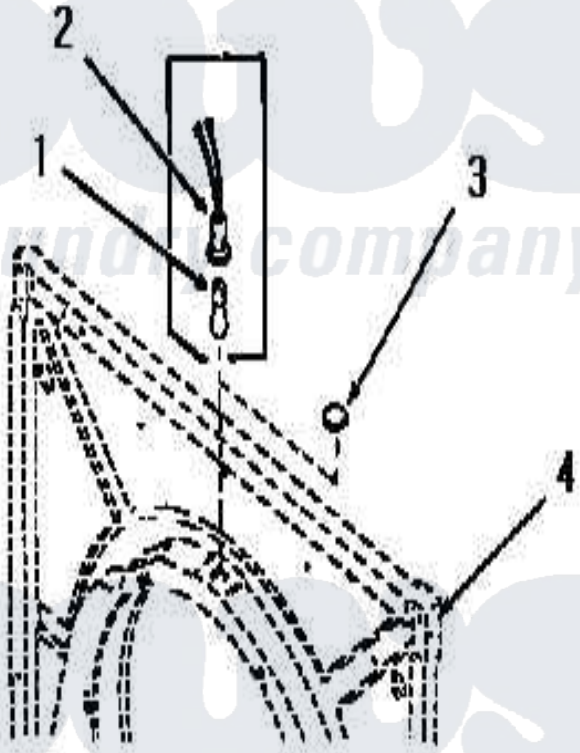

Amana Residential Amana DE3271 Washer Parts Parts Diagram 10 - DRUM LIGHT & COVER PLATE
Click on the part number to view part

Item	Original Part Number	Replaced By	Status	Part Description
1	Y54608	31001575		Bulb, Cylinder Light
2	Y0054609	M0270519		Washer
3	54610		Not Available	PLUG BUTTON
4	Y00000000		Not Available	SEE NOTE FRONT FRAME AND AIR SHROUD