Amana DG3331 15 - FREE STANDING PILOT BNR & BNR CONV KITS

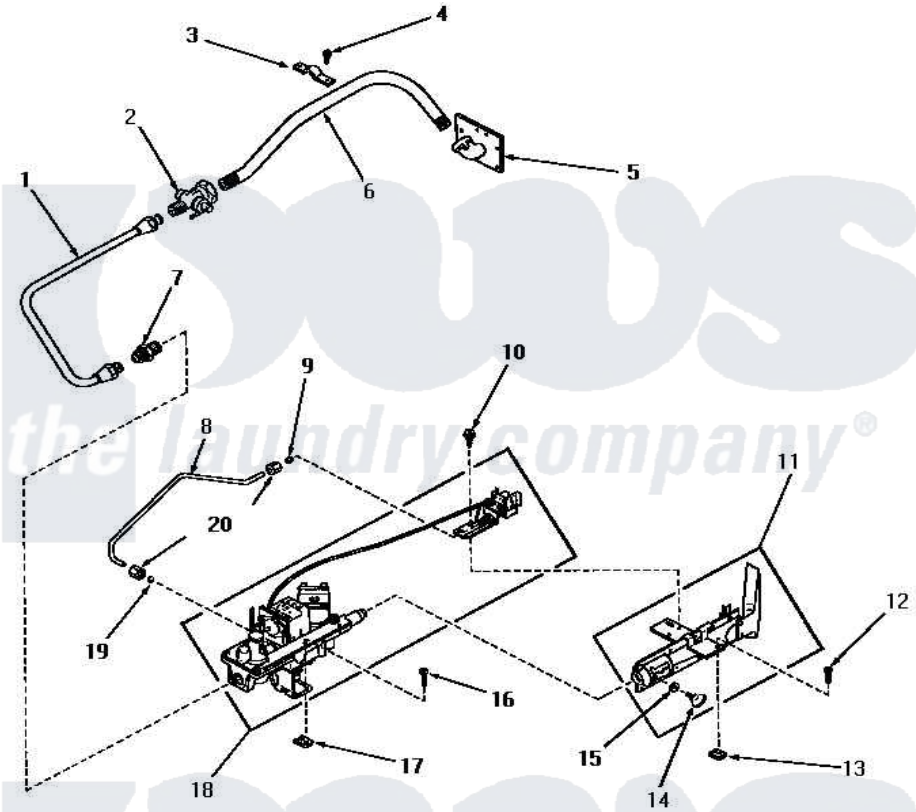

STANDING PILOT BURNER
AND GAS BURNER CONVERSION KITS
(Model numbers with letter "M")

Amana Residential Amana DG3331 Washer Parts Parts Diagram 15 - FREE STANDING PILOT BNR & BNR CONV KITS
Click on the part number to view part

Item	Original Part Number	Replaced By	Status	Part Description
1	54460		Not Available	INLET,GAS TUBE
2	Y51058		Not Available	VALVE
3	51828		Not Available	GAS PIPE CLAMP
4	51784		Not Available	SCREW,10B-16 X 1/2 HEX
5	51842		Not Available	PIPE SUPPORT
6	51775		Not Available	INLET GAS PIPE
7	54408			Connector, Male
8	54489		Not Available	TUBE,PILOT
9	52860		Not Available	SLEEVE,COMPRESSION
10	23962	W10116760		Screw
11	54471		Not Available	TUBE,BURNER
12	20267			Screw, 10-24 X 3/8 Round
13	21747			Nut, Speed
14	54466		Not Available	THUMB SCREW
15	54735		Not Available	WASHER
16	20267			Screw, 10-24 X 3/8 Round

17	21747			Nut, Speed
18	54488		Not Available	GAS VALVE
19	52860		Not Available	SLEEVE,COMPRESSION
20	52861		Not Available	NUT,COMPRESSION
NI	52894		Not Available	STICKER
"	240P3		Not Available	KIT,CONVERSION
"	241P3		Not Available	KIT,CONVERSION
"	51209		Not Available	ORIFICE,NG
"	54472		Not Available	STICKER
"	54492		Not Available	ORIFICE,PILOT
"	54477		Not Available	CAP,VENT
"	52893			Sticker
"	53556		Not Available	STICKER,CONVERSION
"	Y0054476	D7431921Q		Gasket
"	51211			Orifice, LP No.55 Drill
"	54491		Not Available	STICKER
"	54495		Not Available	PLUG,BLOCK-OPEN
"	20247			Plug, Pipe
"	53408		Not Available	LABEL,CHANGE-OVER
"	54473		Not Available	ORIFICE,PILOT

the laundry company®
the laundry company®