Amana HA4371 17 - POWER CORD & WIRE TERMINALS

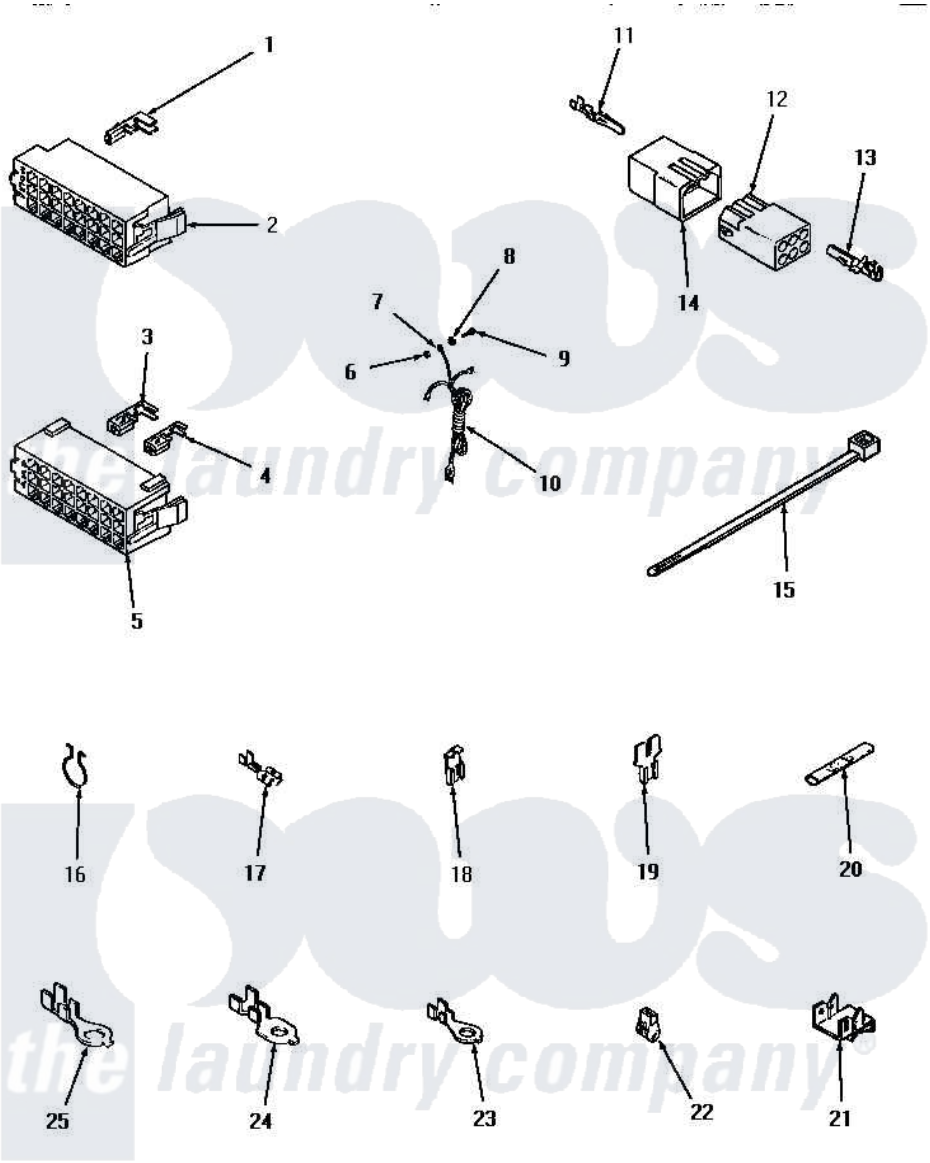

POWER CORD AND WIRE TERMINALS

Amana Residential Amana HA4371 Washer Parts Parts Diagram 17 - POWER CORD & WIRE TERMINALS
Click on the part number to view part

Item	Original Part Number	Replaced By	Status	Part Description
1	24176		Not Available	MOLEX TERMINAL
2	24175	12500058		Knob Ski
3	00183		Not Available	TERMINAL,FEMALE 2-WIRE
4	00180		Not Available	TERMINAL,FEMALE
5	28856		Not Available	HOUSING,24 POSITION
6	03673		Not Available	NUT
7	Y00000000		Not Available	SEE NOTE GROUND WIRE, GREEN
8	03815			Lockwasher, No.10 Ext Shk
9	20267			Screw, 10-24 X 3/8 Round
10	22660		Not Available	POWER CORD AND PLUG
11	Y00116			Terminal, Pin-Male
12	26708			Receptacle, 6 Circuit
13	Y00117	5011-XX		093 Female Socket
14	23041			Plug, 6 Circuit
15	55881	M0321209		Tie-Electrical
16	51291			Clip, Wire

17	Y00119		Not Available	SPADE TERMINAL(18 GAUGE) (1/4 INCH-(1) 18 GAUGE WIRE)
18	Y00120			Terminal, Flag-1/4 Fema
19	29673		Not Available	DOUBLE CONNECTOR
20	21091		Not Available	CONNECTOR TWO 1/4 INCH MALE
21	Y00161	B5733302		Clip, Ground
22	70210		Not Available	INSULATOR,BLUE
23	00110			No.10 18 Gauge Wire
24	Y00111			Ring Terminal No.10 No.10 18 Gauge Wires Or
25	Y00113		Not Available	TERMINAL,RING-1/4 STUD

the laundry company®
the laundry company®
the laundry company®