Amana HE6003 02 - CABINET, EXHAUST DUCT & BASE

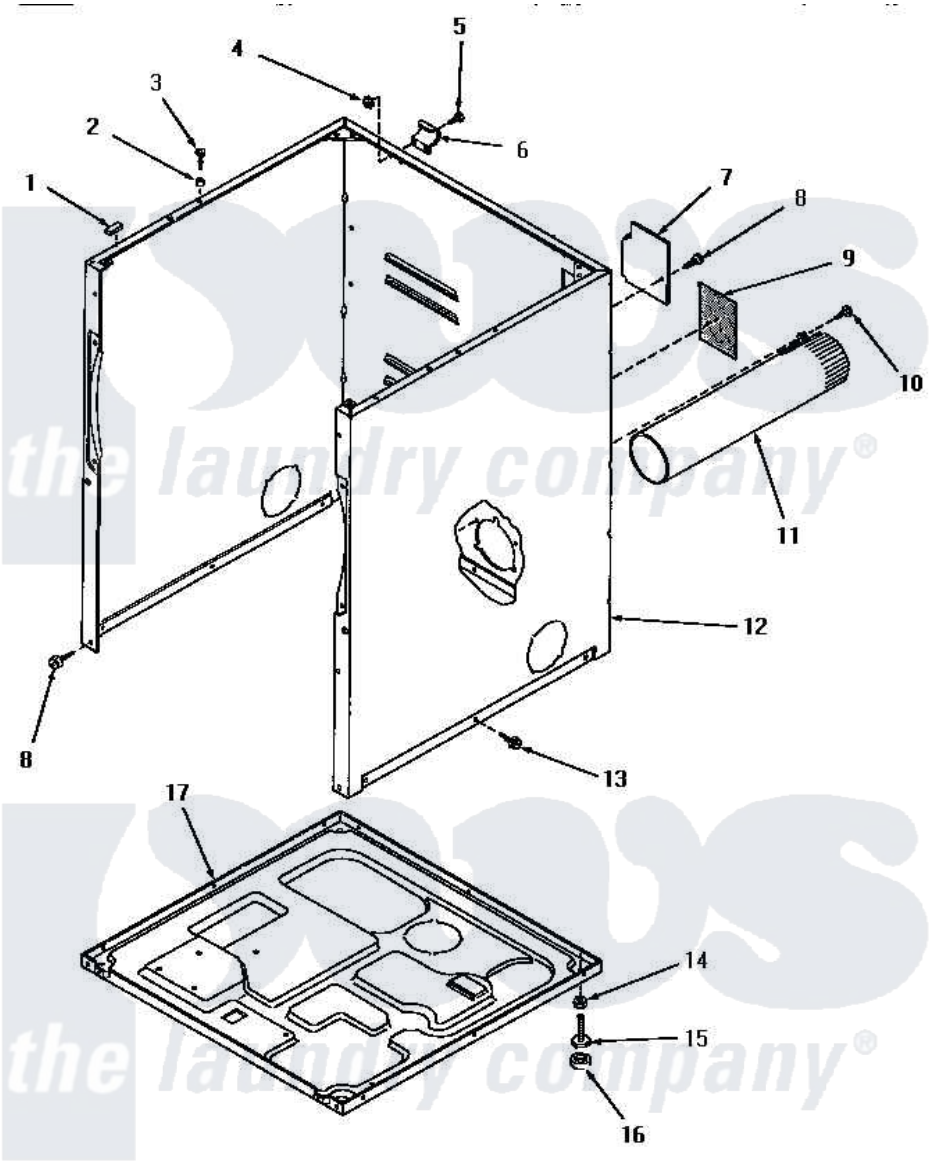

CABINET, EXHAUST DUCT AND BASE

Amana Residential Amana HE6003 Dryer Parts Parts Diagram 02 - CABINET, EXHAUST DUCT & BASE
Click on the part number to view part

Item	Original Part Number	Replaced By	Status	Part Description
1	Y56128			Pad, Bumper
2	56079	505187		Locator, Panel
3	56086	Y014874		Screw, Idler Arm And Sleeve
4	23951	M0282009		Nut
5	25723	27001200		Screw
"	Y90576		Not Available	HEX HEAD SCREW
6	56043		Not Available	HINGE, TOP
7	56044	60821		Acess Cover
8	25723	27001200		Screw
9	Y0056941		Not Available	AIR DIFFUSER
10	25724		Not Available	HEX HEAD SCREW
11	56118		Not Available	ASSY, EXHAUST DUCT
12	57070A		Not Available	CABINET, AVOCADO
"	57070H		Not Available	ASSY,DRYER CABINET
"	57070K		Not Available	CABINET, COFFEE
"	57070L		Not Available	CABINET, ALMOND

"	57070W		Not Available	CABINET, WHITE
13	51784		Not Available	SCREW,10B-16 X 1/2 HEX
14	20274	62739		Nut, Lock
15	Y52696	Y305086		Adjustable Leg And Nut
16	70282	Y314137		Foot, Rubber
17	56074			Base

the laundry company®

the laundry company®

the laundry company®