Amana HG9260 15 - POWER CORD & TERMINALS

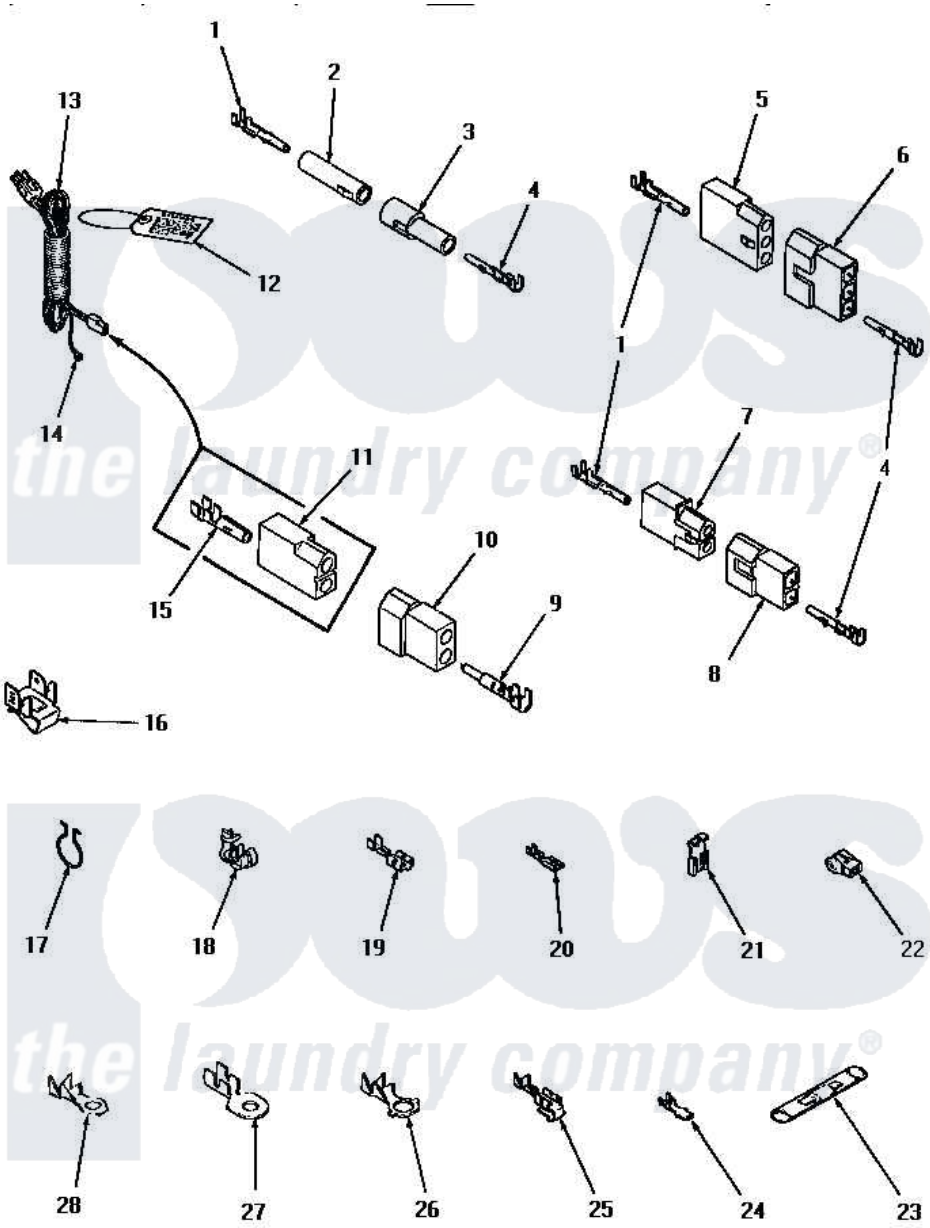

Amana Residential Amana HG9260 Washer Parts Parts Diagram 15 - POWER CORD & TERMINALS
Click on the part number to view part

Item	Original Part Number	Replaced By	Status	Part Description
1	Y00117	5011-XX		093 Female Socket
2	26301			Receptacle, Molex
3	26302		Not Available	PLUG,1 CIRCUIT
4	Y00116			Terminal, Pin-Male
5	23039	697780		Receptacle,
6	23040			Plug-3 Circuit
7	56451			Receptacle, 2 Circuit
8	56448			Terminal Block Plug
9	Y00127			Terminal, Pin-1/8 Male
10	56266			Plug
11	56265			Receptacle, 2 Circuit
12	25235	48301		Hose
13	Y56222	27001142		Cord, Power
14	Y00000000		Not Available	SEE NOTE GROUND WIRE, GREEN
15	00130			Terminal, Pin-1/8 Femal
16	Y00161	B5733302		Clip, Ground

17	51291			Clip, Wire
18	21903	211881		Grommet, Cord Part Not Used-Gas Models Only
19	Y00119		Not Available	SPADE TERMINAL(18 GAUGE) (1/4 INCH-(1) 18 GAUGE WIRE)
20	00112			Terminal, Spade-3/16 Fe
21	Y00120			Terminal, Flag-1/4 Fema
22	70210		Not Available	INSULATOR,BLUE
23	21091		Not Available	CONNECTOR TWO 1/4 INCH MALE
24	Y00139	Y00138		Male Tab Terminal 18 Gauge Wire)
25	Y00114			Spade Terminal
26	Y00113		Not Available	TERMINAL,RING-1/4 STUD
27	Y00111			Ring Terminal No.10 No.10 18 Gauge Wires Or
28	00110			No.10 18 Gauge Wire

the laundry company®
the laundry company®
the laundry company®