Amana LE2802 (BOM: P7804823W) 06 - Page 1

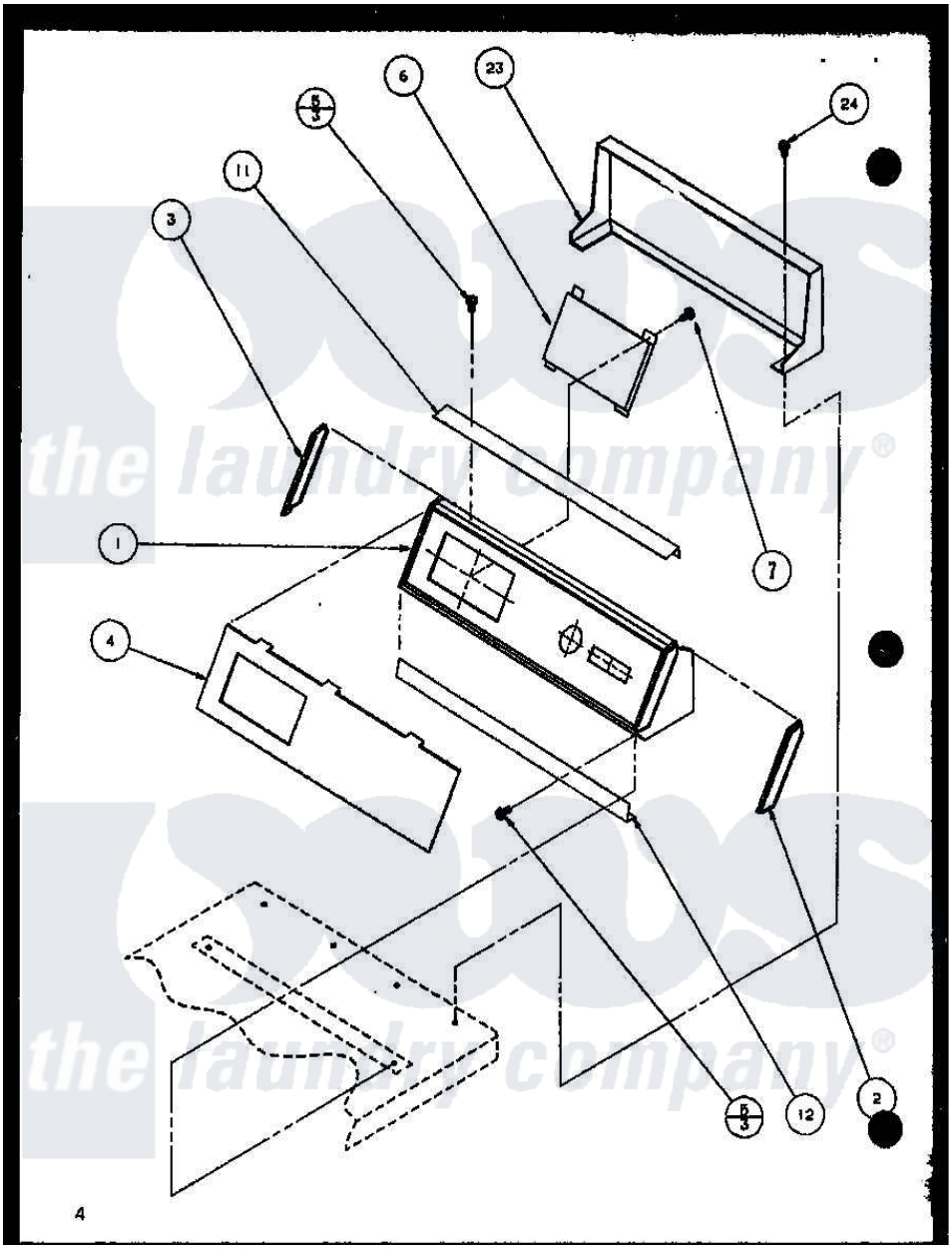

Amana Residential Amana LE2802 (BOM: P7804823W) Dryer Parts Parts Diagram 06 - Page 1
Click on the part number to view part

Item	Original Part Number	Replaced By	Status	Part Description
1	R0605718		Not Available	CONTROL HOOD ASSY, BLACK
2	R0605698		Not Available	END CAP, LEFT, BLACK
3	R0605699		Not Available	END CAP, LEFT, WHITE
4	R0603188		Not Available	PANEL, GRAPHICS
5	R0600095		Not Available	SCREW
6	R0603184	61350		Assembly Electronic Control
7	R0600093	31260		Screw, No.8 X 3/8 Ind H
11	R0605681		Not Available	TRIM STRIP, UPPER
12	R0605703		Not Available	TRIM STRIP, LOWER
23	R0603167		Not Available	REAR PANEL
24	R0600004	W10116760		Screw