Amana LE8207L2 (BOM: PLE8207L2) 02 - CABINET, EXHAUST DUCT AND BASE

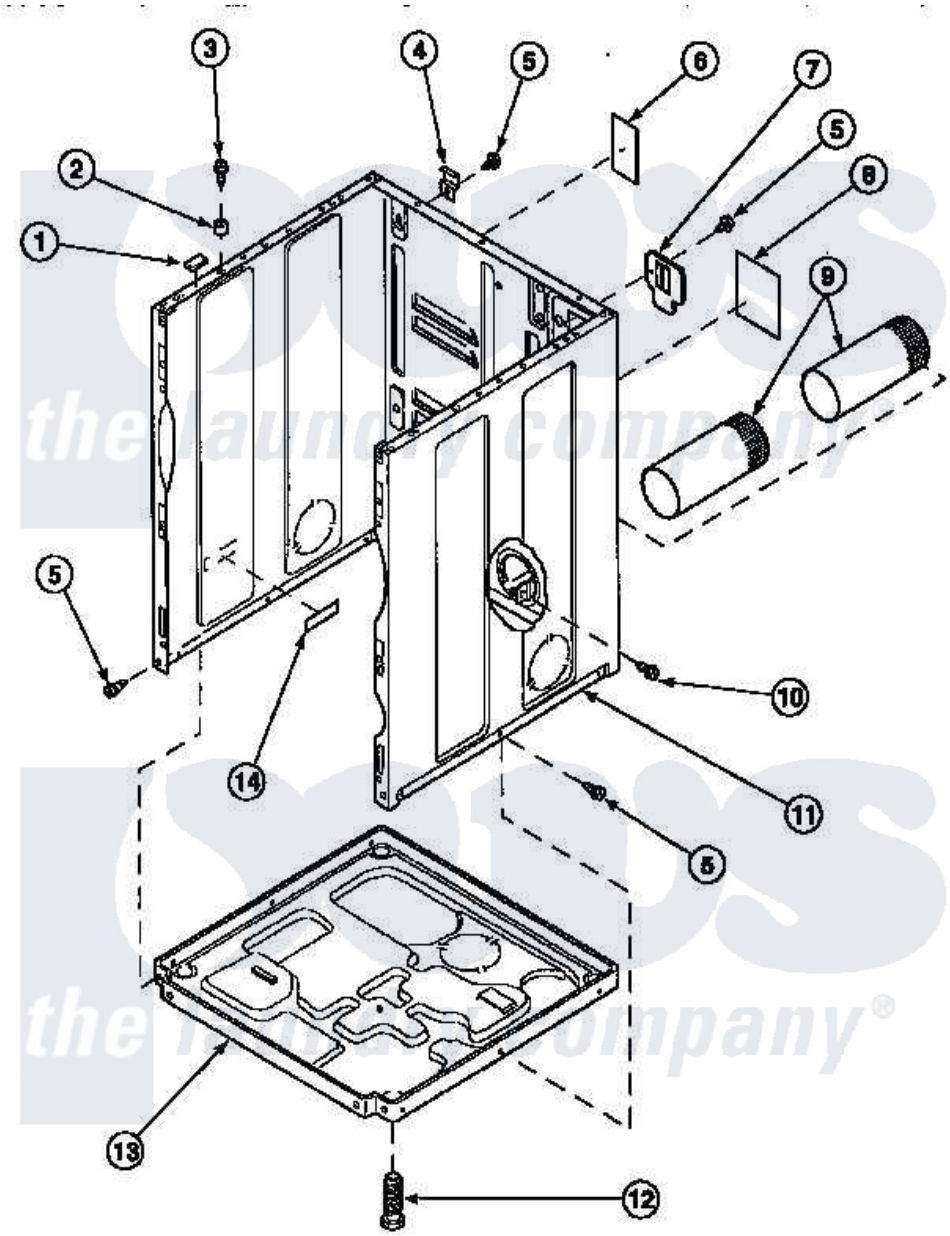

Amana Residential Amana LE8207L2 (BOM: PLE8207L2) Washer Parts Parts Diagram 02 - CABINET, EXHAUST DUCT AND BASE

Click on the part number to view part

Item	Original Part Number	Replaced By	Status	Part Description
1	Y56128			Pad, Bumper
2	56079	505187		Locator, Panel
3	32671	Y014874		Screw, Idler Arm And Sleeve
4	500003			Hinge, Top
5	33562	27001200		Screw
7	500114	510903		Plate Access Panel
8	501289		Not Available	(ELECTRIC MODELS)
9	500064	505518		Duct, Exhaust
10	501668	503688		Screw, 10B-16 X .34 I
11	500001P		Not Available	(ADD LETTER BEFORE ``P`` IN PART
12	Y500101			Leg, Leveling
13	500070			Base, Dryer
14	61294		Not Available	(ELECTRIC MODELS)
NI	521P3			Kit, Flex Vent-Display

the laundry company®

the laundry company®

the laundry company®