# Amana LE8607L2 (BOM: PLE8607L2) 02 - CABINET, EXHAUST DUCT AND BASE

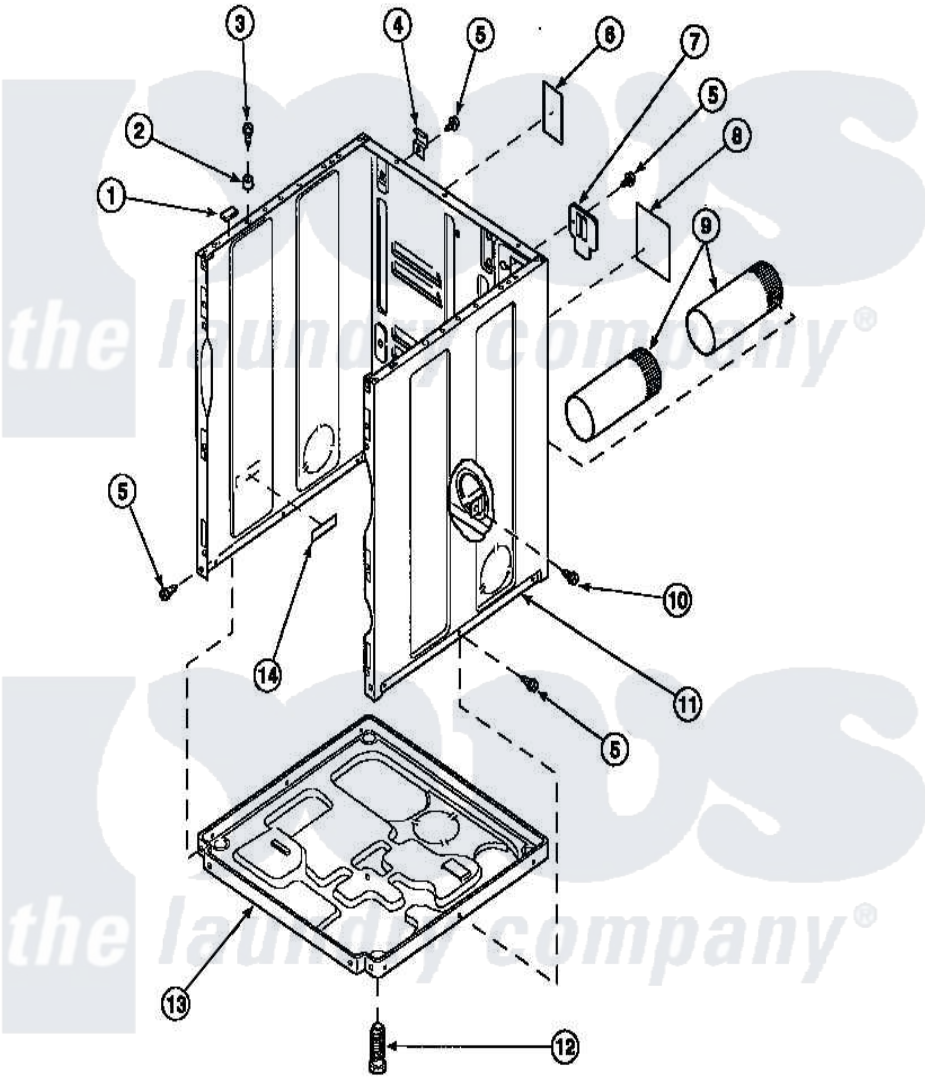


Amana Residential Amana LE8607L2 (BOM: PLE8607L2) Dryer Parts Parts Diagram 02 - CABINET, EXHAUST DUCT AND BASE
Click on the part number to view part

| Item | Original Part Number | Replaced By | Status | Part Description |
|---|---|---|---|---|
| 1 | Y56128 | | | Pad, Bumper |
| 2 | 56079 | 505187 | | Locator, Panel |
| 3 | 32671 | Y014874 | | Screw, Idler Arm And Sleeve |
| 4 | 500003 | | | Hinge, Top |
| 5 | 33562 | 27001200 | | Screw |
| 8 | 501289 | | Not Available | (ELECTRIC MODELS) |
| 9 | 500064 | 505518 | | Duct, Exhaust |
| 10 | 501668 | 503688 | | Screw, 10B-16 X .34 I |
| 11 | 500001P | | Not Available | (ADD LETTER BEFORE ``P`` IN PART |
| 12 | Y500101 | | | Leg, Leveling |
| 13 | 500070 | | | Base, Dryer |
| 14 | 61294 | | Not Available | (ELECTRIC MODELS) |
| NI | 521P3 | | | Kit, Flex Vent-Display |
| " | 528P3 | | | Directional Exhaust Kit |