Amana LEC80AW (BOM: PLEC80AW) 02 - CONTROL PANEL

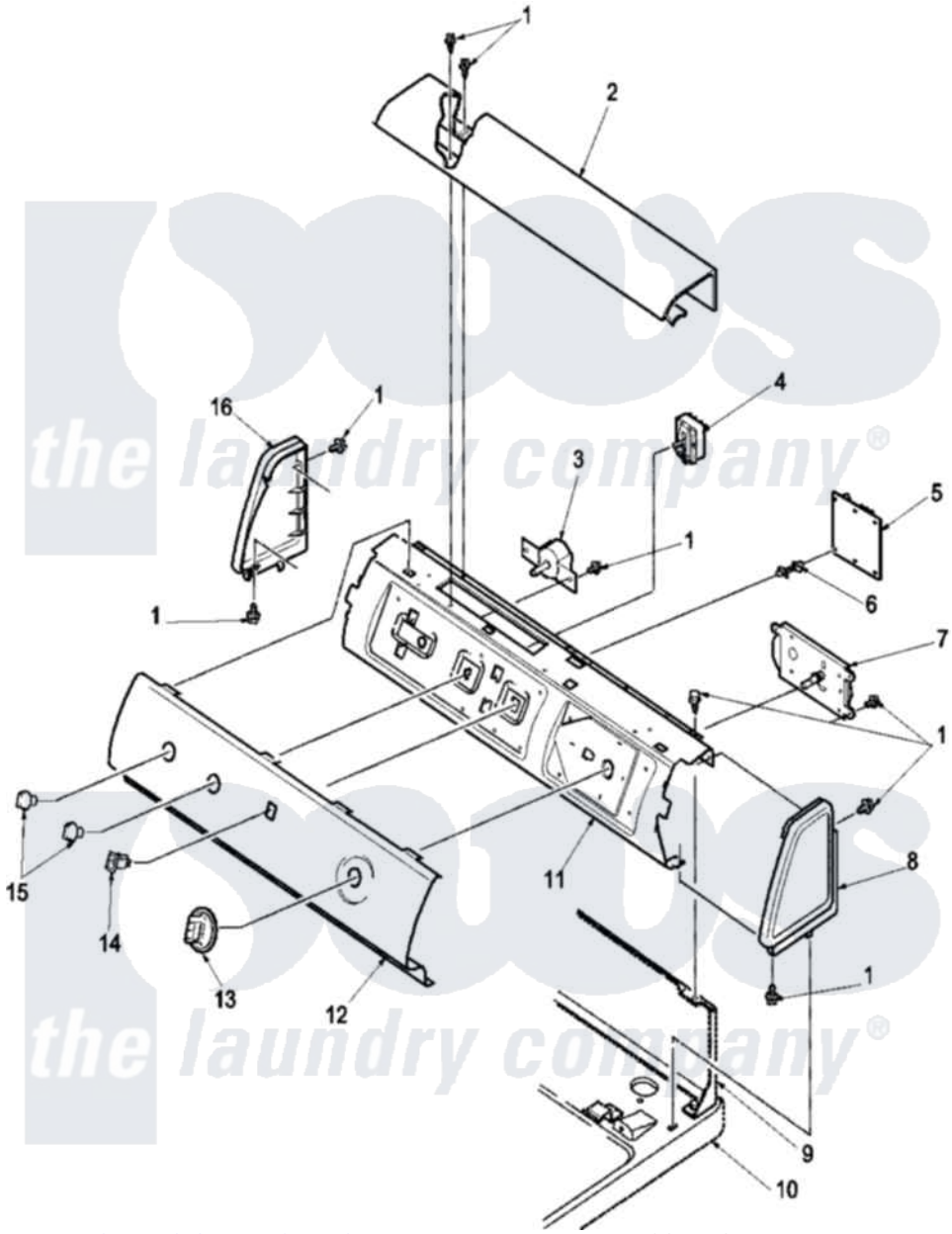

Amana Residential Amana LEC80AW (BOM: PLEC80AW) Dryer Parts Parts Diagram 02 - CONTROL PANEL
Click on the part number to view part

Item	Original Part Number	Replaced By	Status	Part Description
1	501086	90767		Screw, 8A X 3/8 HeX Washer Head Tapping
2	503674W			Cover, Top
3	62173			Switch, Temperature Select
4	504166			Switch, Signal
5	504175			Moisture Sensor
6	501523			Support, Circuit Board
7	503632			Timer, 5 Cycle
8	504008W		Not Available	CAP-END RH
9	Y00000000		Not Available	SEE NOTE SEE NOTE CONTROL HOOD REAR PANEL
10	Y00000000		Not Available	SEE NOTE SEE NOTE CABINET TOP
11	504170		Not Available	SUPPORT, CONTROL PANEL
12	503596W		Not Available	PANEL, GRAPHIC
13	502220W			Knob, Timer
14	38424W			Switch, Rocker

15	36701W		Knob
16	504009W	40012702W	Endcap
NI	504775		Resistor,