Amana LEM437W (BOM: P1176601W W) 12 - TERMINALS

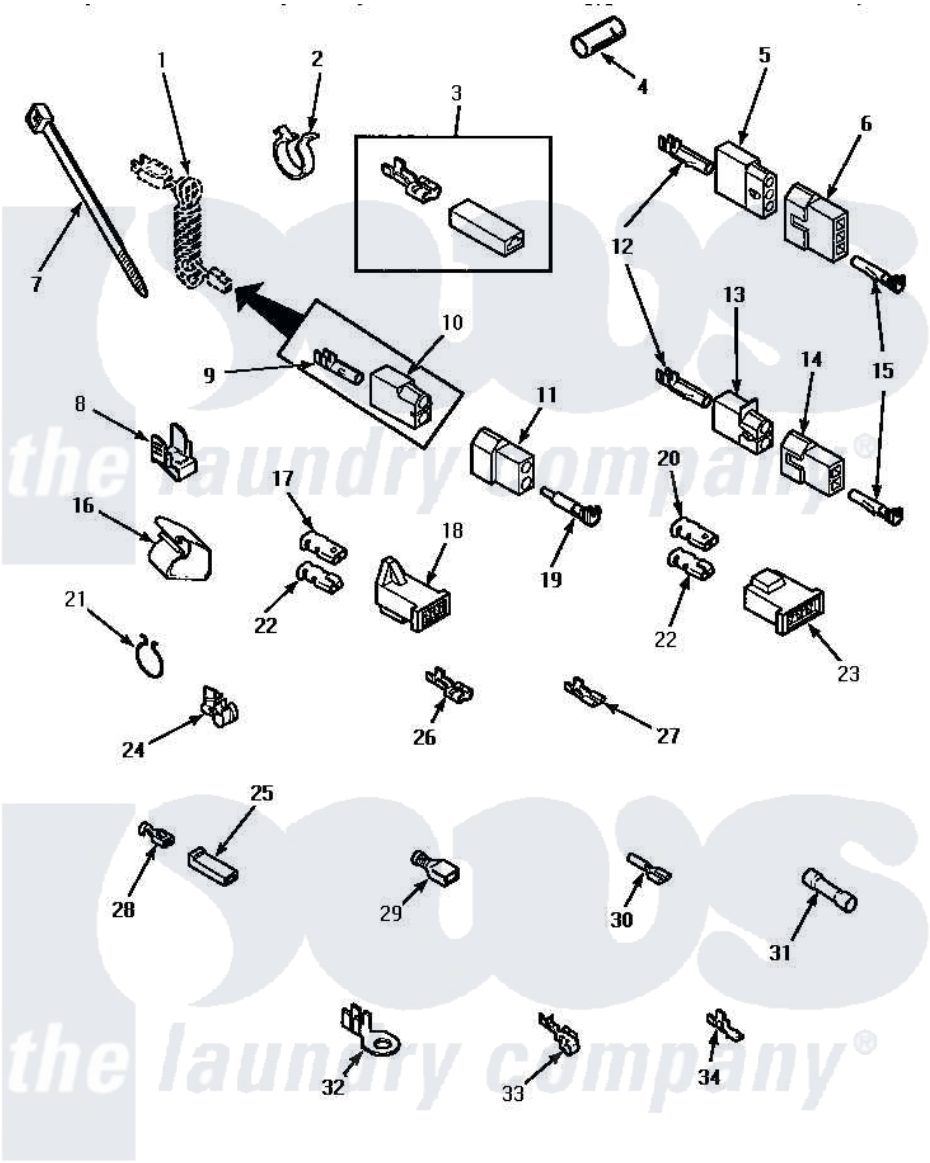

TERMINALS

Amana Residential Amana LEM437W (BOM: P1176601W W) Dryer Parts Parts Diagram 12 - TERMINALS
Click on the part number to view part

Item	Original Part Number	Replaced By	Status	Part Description
1	Y00000000		Not Available	SEE NOTE POWER CORD -- (GAS MODELS)
2	61510	504034		Clip, Wire
3	Y00237			Terminal-Female 1/4 ((1) 12 GAuge Wire Or(2) 18 GA
4	Y21365	503670		Sleeve Insulator
5	23039	697780		Receptacle,
6	23040			Plug-3 Circuit
7	55881	M0321209		Tie-Electrical
8	Y00161	B5733302		Clip, Ground
9	00130			Terminal, Pin-1/8 Femal
10	56265			Receptacle, 2 Circuit
11	56266			Plug
12	Y00117	5011-XX		093 Female Socket
13	56451			Receptacle, 2 Circuit
14	56448			Terminal Block Plug
15	Y00116			Terminal, Pin-Male

16	35521		Not Available	CLIP,HARNESS HOLDER
17	Y00189			Terminal, Spade
18	58799			Connector-2 Circuit
19	Y00127			Terminal, Pin-1/8 Male
20	Y00189			Terminal, Spade
21	51291			Clip, Wire
22	Y00190			Connector-Receptacle
23	58800		Not Available	CONNECTOR-3 CIRCUIT (3 CIRCUIT CONNECTOR)
24	21903	211881		Grommet, Cord Part Not Used-Gas Models Only
25	90789			Connector
26	Y00245	M0320576		Terminal
"	Y00121		Not Available	SPADE TERMINAL(12 GAUGE) (1/4 INCH-(2) 18 GAUGE WIRES O
"	Y00119		Not Available	SPADE TERMINAL(18 GAUGE) (1/4 INCH-(1) 18 GAUGE WIRE)
27	Y00124			Spade Terminal (18 Gauge) (3/16 Inch-(1) 18 Gauge Wire-.
"	Y00209			Spade Terminal (18 Gauge) (3/16 Inch-(2) 18 Gauge Wires-
"	00156	00156SRE		65br30/FI
28	Y00115			Lock In Spade Terminal (18 Gaug (1/4 Inch-(1) 18 Gauge Wire)
"	00122		Not Available	(1/4 INCH-(2) 18 GAUGE WIRES O
29	Y00165			Insulated Spade Terminal
"	Y00163	285432		Terminal
30	Y00214		Not Available	BARREL INSULATED SPADE(18 GAUG (1/4 INCH-18 GAUGE WIRE)
"	Y00215			Barrel Insulated Spade
31	30865			Butt Splice Connector
32	Y00111			Ring Terminal No.10 No.10 18 Gauge Wires Or
"	00110			No.10 18 Gauge Wire
33	Y00114			Spade Terminal
34	Y00139	Y00138		Male Tab Terminal 18 Gauge Wire)
"	Y00138			Male Tab Terminal 18 Gauge Wire)

the laundry company®