Amana LG8269W2 (BOM: PLG8269W2) 05 - GRAPHIC PANEL, CONTROL HOOD AND CONTROLS

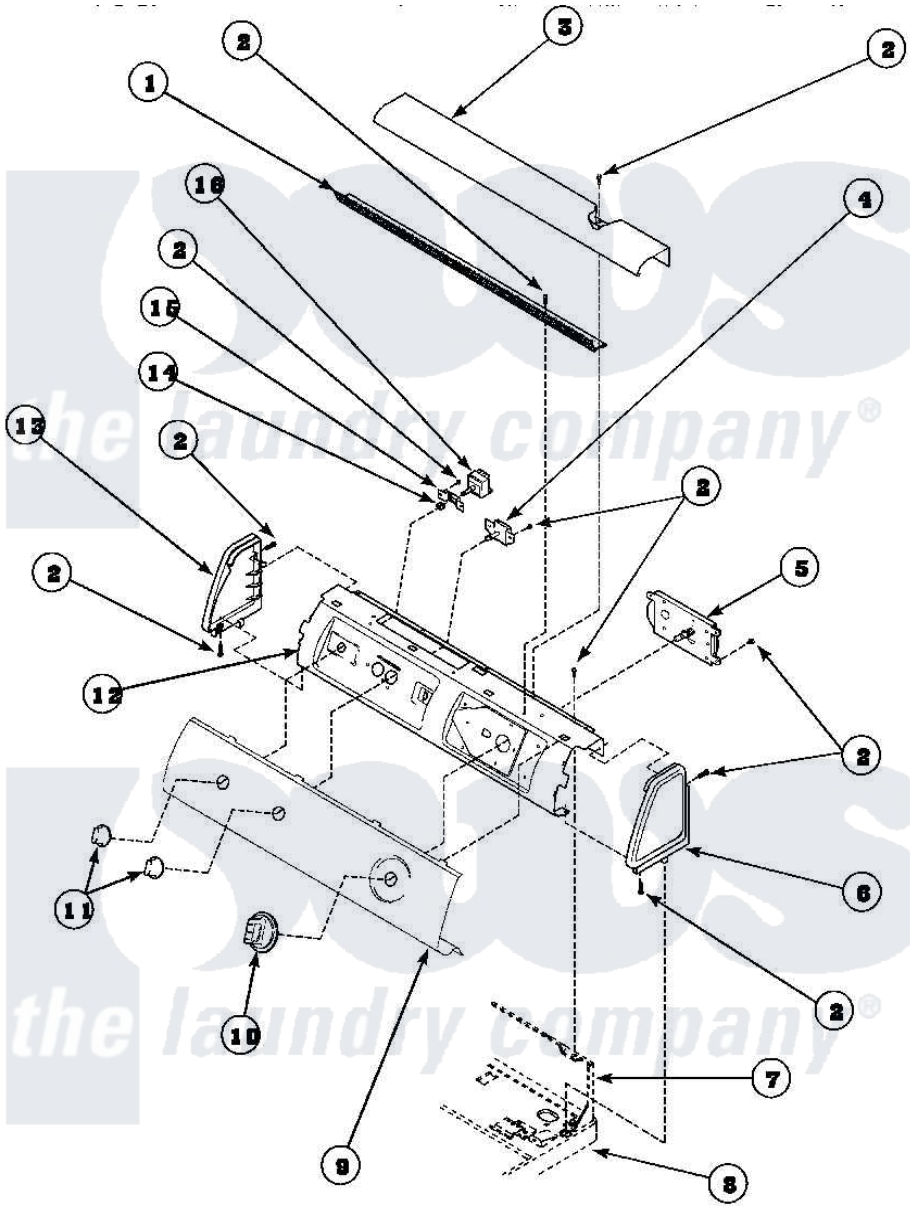

Amana Residential Amana LG8269W2 (BOM: PLG8269W2) Dryer Parts Parts Diagram 05 - GRAPHIC PANEL, CONTROL HOOD AND CONTROLS
Click on the part number to view part

Item	Original Part Number	Replaced By	Status	Part Description
1	500305		Not Available	DIFFUSER W/OUT HOLE
2	501086	90767		Screw, 8A X 3/8 HeX Washer Head Tapping
3	500303		Not Available	COVER, TOP
4	500823			Signal, Rotary
5	502963			Timer, 3 Cycle
6	34817		Not Available	END CAP(RIGHT)
7	500343		Not Available	PANEL,BACK(HOME HOOD)
8	500085P		Not Available	(ADD LETTER L-L, W-W TO PART N
9	Y503255		Not Available	GRAPHIC PANEL
10	502220		Not Available	KNOB, TIMER
11	36701		Not Available	KNOB, TEMP
12	500300		Not Available	BRACKET,CONTROL SUPPORT-MECH
13	34818		Not Available	END CAP(LEFT)

14	57584	Not Available	NUT
15	59704		Bracket, Switch Mount
16	Y61511	Not Available	SWITCH,FABRIC SELECTOR

the laundry company®
the laundry company®
the laundry company®